THE UNIVERSITY OF CALGARY

THE DEVELOPMENT OF A BI-AXIAL TESTING MACHINE

by

KIM KELLN

A THESIS

SUBMITTED TO THE FACULTY OF GRADUATE STUDIES

IN PARTIAL FULFILLMENT OF THE REQUIREMENTS FOR THE DEGREE OF

MASTER OF SCIENCE IN CIVIL ENGINEERING

DEPARTMENT OF CIVIL ENGINEERING

CALGARY, ALBERTA

DECEMBER, 1980

© KIM KELLN, 1980

THE UNIVERSITY OF CALGARY

FACULTY OF GRADUATE STUDIES

The undersigned certify that they have read, and recommend to the Faculty of Graduate Studies for acceptance, a thesis entitled, "The Development of a Bi-Axial Testing Machine", submitted by Kim C. Kelln in partial fulfillment of the requirements for the degree of Master of Science in Civil Engineering.

Dr. W. H. Dilger (Supervisor)
Department of Civil Engineering

Dr. E. W. Johnson
Department of Mechanical Engineering

Dr. I. J. Jordaan
Department of Civil Engineering

Dr. A. E. McMullen
Department of Civil Engineering

December 19, 1980

ABSTRACT

This thesis describes the design, construction and verification of a bi-axial testing machine, which will be used in the investigation of the response of plain concrete to stress regimes resulting from applied bi-axial compression-tension and tension-tension rates of deformation.

The testing machine is comprised of two, heavy, steel frames which are independently supported and are arranged orthogonally. The loads are applied by electro-hydraulically controlled actuators in such a way that constant rates of deformation are maintained across the specimen throughout the test. Forces are transmitted to thick plate specimens by "brush bearing" platens which were designed to minimize the degree of lateral boundary constraint. The platens are fixed relative to each other and any irregularities in the platen-specimen interface are taken up by a thin layer of high strength, high modulus epoxy.

The results of the limited testing program indicate that the testing machine operates satisfactorily, producing reasonably uniform strains (stresses) throughout the concrete test specimens, and with a high degree of reliability.

ACKNOWLEDGMENTS

This project was carried out under the supervision of Dr. W. Dilger, to whom the author is grateful for his valuable guidance and encouragement given during all phases of the work.

The author would also like to express his gratitude to the technicians and staff of the Department of Civil Engineering and of the Engineering Faculty Machine Shop, without whom this project could not have been undertaken nor completed.

Thanks are also due to the National Research Council of Canada, the Province of Alberta and the University of Calgary for the financial assistance provided to the author throughout the course of the project.

Special thanks are extended to Gordon Bodie, Dan Tilleman and Beverley Frangos who have assisted greatly in the preparation of this thesis.

Christine and Jocelyn

TABLE OF CONTENTS

		Page
ABSTRACT		iii
ACKNOWLEDGMENTS		iv
TABLE OF CONTENTS		vi
LIST OF TABLES		ix
LIST OF FIGURES		x
NOTATION AND UNITS		xiii
DIMENSIONS		xiv
CHAPTER		
1	INTRODUCTION	1
	1.1 General	1
	1.2 Previous Investigations	2
	1.2.1 Solid Cylinders	2
	1.2.2 Hollow Cylinders	3
	1.2.3 Cubes and Plates	4
	1.2.3.1 Unlubricated solid steel platens	5
	1.2.3.2 Lubricated steel platens	6
	1.2.3.3 Fluid cushion	7
	1.2.3.4 Brush bearing platens	7
	1.2.3.5 Flexible platens	8
	1.2.3.6 Testing frames and systems	8
	1.2.4 Conclusions from Previous Investigations	10
	1.3 Scope of the Project	10

TABLE OF CONTENTS (continued)

CHAPTER			Page
2	DESIGN AND CONSTRUCTION		12
	2.1	General	12
	2.2	Design and Construction of Brush Bearing Platens	14
		2.2.1 Design Length of Tension Rods	15
		2.2.2 Design Length of Compression Rods	15
		2.2.3 Platen Heads	16
		2.2.4 LVDT Mounts	17
		2.2.5 Fabrication and Assembly	17
	2.3	Design and Construction of the Testing Frames	20
		2.3.1 Design of Crossheads	24
		2.3.2 Fabrication of Crossheads	29
		2.3.3 Design and Fabrication of Longitudinal Posts	32
	2.4	Testing Machine Support System	32
	2.5	Loading System	33
	2.6	Miscellaneous Equipment	35
	2.7	Assembly and Alignment of Testing Machine	38
3	EXPERIMENTATION		41
	3.1	General	41
	3.2	Concrete Mix Design and Specimen Preparation	42
	3.3	Series I Tests	45
	3.4	Platen Alignment: Measurement and Modifications	48
	3.5	Epoxies for Tension and Compression Tests	52

TABLE OF CONTENTS (continued)

CHAPTER			Page
	3.6	Series II Tests.	53
		3.6.1 Uni-axial Compression Tests	53
		3.6.2 Uni-axial Tension Tests	55
		3.6.3 Bi-axial Test	55
		3.6.4 Summary	56
4	RESULTS		58
	4.1	General.	58
	4.2	Frame 1: Uni-axial Compression Tests.	59
		4.2.1 Strain Distribution in Direction of Loading.	61
		4.2.2 Strain Distribution Transverse to the Direction of Loading	67
		4.2.3 Specimen Fracture	67
	4.3	Frame 2: Uni-axial Tension Tests.	70
		4.3.1 Specimen Fracture	74
	4.4	Bi-axial Test.	74
5	CONCLUSIONS AND RECOMMENDATIONS		84
	5.1	Conclusions.	84
	5.2	Recommendations.	85
REFERENCES			87
APPENDIX			
A	SPECIMEN IDENTIFICATION		A.1

LIST OF TABLES

TABLE		Page
2.1	STABILITY SAFETY FACTORS FOR ROD LENGTHS OF 90 MM AND 75 MM.	16
3.1	MIX PROPORTIONS FOR ONE CUBIC METRE OF CONCRETE	43
4.1	SPECIMEN DIMENSIONS FOR UNI-AXIAL COMPRESSION TESTS	60
4.2	COMPARISON OF PROPERTIES OF σ_1-ε_1 CURVES FOR UNI-AXIAL COMPRESSION TESTS	65
4.3	CORRELATION BETWEEN STRAIN GAUGES AND ε_1, AS MEASURED BY LVDT, FOR UNI-AXIAL COMPRESSION TESTS	66
4.4	SPECIMEN DIMENSIONS FOR UNI-AXIAL TENSION TESTS	71
4.5	SPECIMEN DIMENSIONS FOR BI-AXIAL TEST	77

LIST OF FIGURES

FIGURE		Page
1.1	CATEGORIZATION OF VARIOUS TEST METHODS ACCORDING TO DEGREE OF RESTRAINT (GERSTLE ET AL., 1976)	6
2.1	CONFIGURATION OF PLATEN LOADING SURFACE.	14
2.2	PLATEN HEAD DIMENSIONS AND FABRICATION NOTES	18
2.3	ASSEMBLED PLATEN DIMENSIONS.	19
2.4a	COMPLETED PLATEN HEAD.	21
2.4b	PLATEN HEAD AND LOOSE ASSEMBLY OF INDIVIDUAL RODS. . .	21
2.5a	JIG USED FOR HOLDING RODS IN PLACE FOR SOLDERING . . .	22
2.5b	SOLDERING OPERATION.	22
2.6a	MACHINING OF THE LOADING SURFACE	23
2.6b	COMPLETED PLATEN SET IV.	23
2.7	MINIMUM DIMENSIONS FOR SIZING OF TESTING MACHINE FRAMES	25
2.8a	OVERALL VIEW OF ASSEMBLED TESTING MACHINE (1).	26
2.8b	OVERALL VIEW OF ASSEMBLED TESTING MACHINE (2).	27
2.9	CROSSHEAD DIMENSIONS FOR FRAMES 1 AND 2.	28
2.10	TESTING MACHINE IDEALIZATION	30
2.11	RESULTS OF ANALYSIS OF IDEAL TESTING MACHINE STIFFNESS.	31
2.12	LONGITUDINAL POSTS FOR FRAMES 1 AND 2.	33
2.13	ROLLER SUPPORT ASSEMBLIES FOR FRAMES 1 AND 2	34
2.14a	HYDRAULIC PLUMBING SYSTEM.	36
2.14b	HYDRAULIC VALVES AT LINE "TAMER"	36
2.15	LVDT MOUNTING BRACKETS	37

LIST OF FIGURES (continued)

FIGURE		Page
2.16	TRANSVERSE STRAIN MEASURING DEVICE	39
3.1	SPECIMEN GANG MOULD.	44
3.2	LAPPING WHEEL AND JIG WITH SPECIMEN IN PLACE	46
3.3	COMPARISON BETWEEN AN AS CAST AND A PREPARED (LAPPED) SPECIMEN	46
3.4	REACTING PLATEN LOADING SURFACE WITH RESPECT TO THE PLANE OF REFERENCE FOR 4 PLATEN SETS.	50
3.5	ALIGNMENT SHIM DIMENSIONS.	51
4.1	SIGN CONVENTION.	59
4.2	STRAIN GAUGES FOR UNI-AXIAL CONPRESSION TESTS.	60
4.3	STRESS-STRAIN CURVES FOR UNI-AXIAL COMPRESSION TESTS .	62
4.4	COMPARISON OF STRESS-STRAIN CURVES FOR UNI-AXIAL COMPRESSION TESTS.	63
4.5	RANGE OF AXIAL STRAIN GAUGE READINGS FOR UNI-AXIAL COMPRESSION TESTS.	64
4.6	90% CONFIDENCE LIMITS ON AVERAGE STRAIN GAUGE READINGS FOR UNI-AXIAL COMPRESSION TESTS	68
4.7	FRACTURE PATTERNS FOR UNI-AXIAL COMPRESSION TEST SPECIMENS	69
4.8	STRAIN GAUGES FOR UNI-AXIAL TENSION TESTS.	71
4.9	STRESS-STRAIN CURVES FOR UNI-AXIAL TENSION TESTS . . .	73
4.10	90% CONFIDENCE LIMITS ON AVERAGE STRAIN GAUGE READINGS FOR UNI-AXIAL TENSION TESTS	75
4.11	FRACTURE PATTERNS FOR UNI-AXIAL TENSION TESTS.	76
4.12	STRAIN GAUGES FOR BI-AXIAL TEST.	78
4.13	STRESS-STRAIN CURVES FOR BI-AXIAL TEST (NO. 39). . . .	79

LIST OF FIGURES (continued)

FIGURE		Page
4.14	RELATIONSHIPS BETWEEN APPLIED STRESSES AND STRAINS FOR BI-AXIAL TEST (NO. 39)	80
4.15	90% CONFIDENCE LIMITS ON AVERAGE STRAIN GAUGE READINGS FOR BI-AXIAL TEST (NO. 39).	82
4.16	FRACTURE PATTERN FOR BI-AXIAL TEST (NO. 39).	83
A.1	EXAMPLES OF SPECIMEN IDENTIFICATION.	A.2

NOTATION AND UNITS

A_i = Average cross-sectional area of specimen normal to axis x_i (mm^2)

d_i = Average deformation of specimen in the direction x_i (mm)

L_i = Average length of specimen in the direction x_i (mm)

P_i = Measured load applied to specimen in the direction x_i (N)

x_i = Orthogonal axis as defined in Figure 4.1, i = 1,2,3

σ_i = Average stress normal to axis $x_i = P_i/A_i$ (MPa). Compressive stresses are negative

ε_i = Average strain in the specimen in the direction $x_i = d_i/L_i$ (mm/mm). Compressive strains are negative

ε_v = Volumetric strain = $\varepsilon_1 + \varepsilon_2 + \varepsilon_3$ (mm/mm)

DIMENSIONS

All dimensions are given in mm. Where products have been used which were manufactured to Imperial dimensions, the dimensions are given first in mm, rounded in accordance with CAN3-Z234.1-76 Canadian Metric Practice Guide, followed by the exact values in inches (IN.) in brackets. For example, 102 mm (4 IN.). The same dimension is noted on drawings as 102 mm (IMP. 4").

Threads are given in both S.I. and Imperial units. S.I. notation is "size x pitch", both in mm and Imperial notation is "size-threads per inch and class of thread", with the size being given in inches. For example 38.0 x 2.12 (IMP. 1½" - 12 UNF).

CHAPTER 1

INTRODUCTION

1.1 General

Concrete beams subject to shear or torsion, hyperbolic-paraboloid shells and concrete silos are all structures in which the predominant and controlling state of stress is bi-axial compression-tension. The design of these structures, however, is presently based mainly on the knowledge of uni-axial behaviour only or on the results of large scale laboratory tests. Although this approach is adequate for the design of relatively simple structures or of structures for which there is ample proof of their safety, real improvements in efficiency, economy and safety can only be achieved through an understanding of concrete behaviour under stress states similar to those in the actual structure. Unfortunately, this knowledge can only be obtained through extensive experimentation using complex and sophisticated testing equipment and well defined procedures.

The objective of this project is to develop a testing machine which is capable of testing plain concrete specimens under bi-axial compression-tension and tension-tension states of stress. Procedures relating to specimen preparation, test setup and conduct of the experiments will also be elaborated. Extensive experimentation is not included in the scope of this project. The primary purpose of the development of this testing machine is the future investigation of concrete subject to the aforementioned stress states and the establishment of stress-strain and strength relationships.

1.2 Previous Investigations

An extensive review of previous research, relating both to bi-axial testing and results and testing machine design, will not be presented here as many excellent summaries have already been done (Nelisson, 1972; Tasuji, 1976; Wastiels, 1979). The research will be reviewed in three parts, categorized according to the shape of the test specimen (either solid or hollow cylinders or plates and cubes), and the emphasis will be on the characteristics of the testing machines which were used.

1.2.1 Solid Cylinders

This type of specimen has been used extensively in the past and is still used occasionally for the investigation of the ultimate strength of concrete subject to multi-axial compressive stresses. The testing apparatus consists essentially of a modified tri-axial cell mounted in a universal testing machine. The specimen, seated in a rubber or brass membrane, is mounted in the cell and a constant hydrostatic pressure is applied using hydraulic pumps. An axial compressive or tensile load is then applied at a constant rate. Newman (1974) describes the development of a testing machine of this type.

Until recently, few attempts were made to measure the deformational characteristics of the concrete specimens. Hobbs (1970), describes an extensive testing program in which load and axial deformation were recorded. A set of curves was developed, relating axial stress to axial deformation for various levels of confining pressure.

One of the disadvantages of testing concrete in this way is that direct observation of the specimen at all loading stages is not possible. In addition, not all bi-axial stress states can be investi-

gated since the stresses in two principal directions are constant and equal. In fact, unless axial deformation of the cylinder is unrestrained, only the special cases of tri-axial compression or tri-axial compression-compression-tension can be studied. Other drawbacks are that penetration of the hydraulic fluid into the pores of the specimen must be prevented and that measurement of specimen deformations directly is not possible.

1.2.2 Hollow Cylinders

If the proper loading is applied to a hollow cylindrical specimen, all combinations of bi-axial stresses can be generated. Two types of loading can be used:

(1) Axial compression or tension combined with an internal or external pressure, or

(2) Axial compression or tension combined with a torsional moment.

McHenry and Karni (1958) used hollow cylinders subjected to axial compression and constant internal pressure in order to determine concrete strength under bi-axial compression-tension. The internal pressure was developed by a water-filled rubber cylinder which was sealed and inserted into the hollow concrete specimen. Hydraulic fluid pressure was applied to the top of the rubber cylinder through a rubber membrane. The specimen used was 355 mm in diameter and had 51 mm thick walls.

Bellamy (1961) used a similar arrangement to that used for testing solid cylinders. Hollow cylinders, 152 mm in diameter with 38.5 mm thick walls, were placed in a modified tri-axial cell. A confining

pressure was applied to the cylinders, encased in a neoprene sheath, and the cylinders were then loaded axially, at a constant rate, to failure.

The principal disadvantage of this method of testing is that various assumptions must be made as to the actual stress distribution across the wall of the cylinder. In both of the above cases, a uniform distribution was assumed and no account was taken of the radial stresses due to the hydraulic pressure.

In the studies by Bresler and Pister (1958) and Goode and Helmy (1967), the strength of hollow concrete cylinders subjected to combined axial compression and torsion was investigated. The testing machines basically consisted of a loading apparatus capable of applying a constant axial load and a loading frame attached to torque bands at the ends of the specimen, through which eccentric and opposing loads could be applied. Thrust bearings and spherical seats were used to eliminate the rotational restraints at the ends. The method of testing was to apply a constant axial compression to the cylinder and then increase the torsion in uniform increments until failure.

Again, as for hollow cylinders with internal or external pressure, assumptions had to be made as to the stress distribution in the cylinder wall. In both investigations a linear stress distribution through the walls was assumed and all calculated stresses were based on linear-elastic theory.

1.2.3 Cubes and Plates

Because of the inherent advantages of cubes or plates as compared to solid and hollow cylinders, these types of specimens are being

increasingly used for the investigation of the multi-axial behaviour of concrete. In particular, the principal stresses and strains can be easily and directly calculated from the measured loads and deformations, since the loading occurs in orthogonal planes. It is not necessary to make assumptions as to the actual stress distribution throughout the test specimen. This, of course, assumes that the lateral restraint due to the loading device at the boundary of the specimen and that the interaction between perpendicular loading devices are minimized or eliminated entirely (Nelisson, 1972). The influence of lateral restraint at the loaded boundary is well documented for uni-axial tests (Neville, 1973).

Many different types of testing machines and loading systems have been built in attempts at overcoming the problems of boundary constraint. In the comparative study by Gerstle et al. (1976), the various test methods are categorized, qualitatively, according to the degree of lateral and normal constraint which is evident at the specimen boundary (Figure 1.1).

It was assumed, in the comparative study, that the orthogonal loading systems were independent and that the amount of interaction was minimal.

1.2.3.1 Unlubricated solid steel platens

This is the simplest loading system, as no special techniques are required for loading the specimen. Because of the high degree of lateral restraint, this system is not used except as a comparison to the other systems.

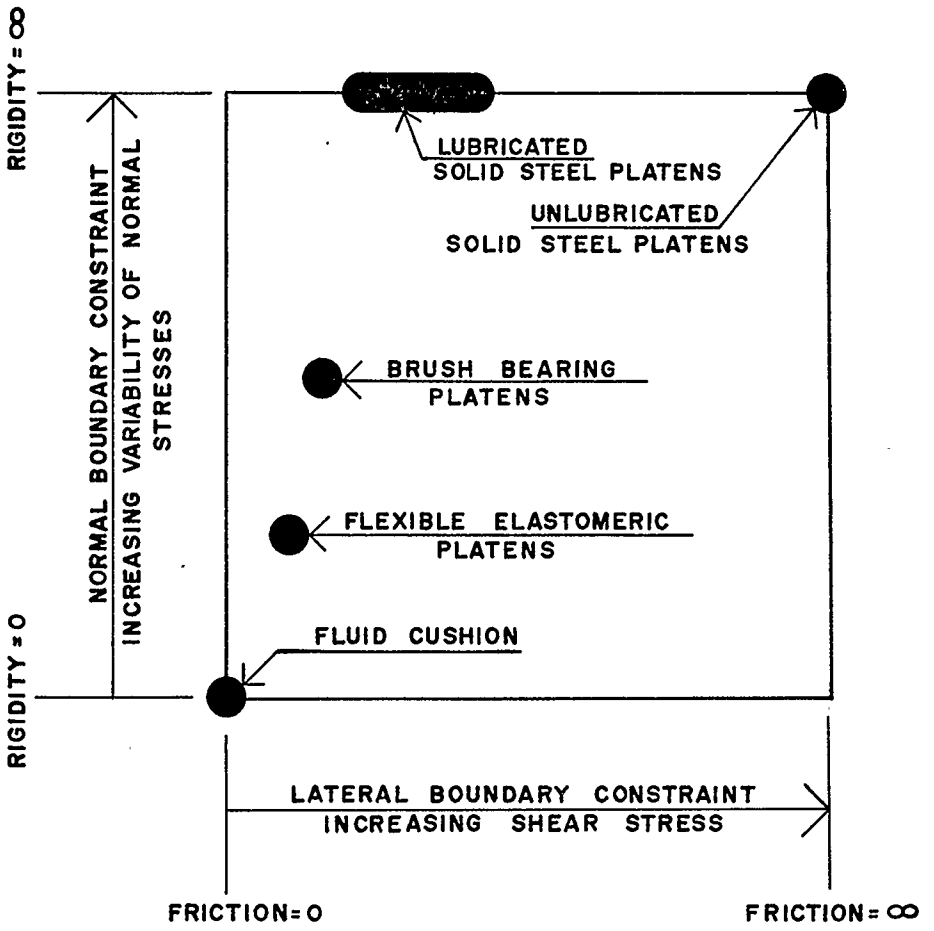

FIGURE 1.1 CATEGORIZATION OF VARIOUS TEST METHODS ACCORDING TO DEGREE OF RESTRAINT (GERSTLE ET AL., 1976)

1.2.3.2 Lubricated steel platens

A solid platen, similar to that described in Section 1.2.3.1, is used in conjunction with a lubricated interface between the platen and the specimen. The best method (i.e., the one providing the least restraint) is to use a double layer of rubber, or polyethylene, sheets with a layer of silicon grease between (Nelisson, 1972). Robinson (1967) used a special curing compound applied directly to the concrete surface. A quantitative assessment of the degree of restraint of this method was not given, however.

Although this method compares well with the other methods, with respect to ultimate strength, its major disadvantage is that tensile loads cannot be applied. Furthermore, control of the rate of loading is made difficult by the relatively weak, unbonded interface.

1.2.3.3 Fluid cushion

In terms of the degree of constraint provided at the specimen boundary, this is the best system. Andenaes et al. (1977) describes a cubical test cell which is designed so that prescribed uniform compressive principal stresses can be applied to the specimen without any displacement boundary constraints. The cubical specimens are loaded by means of flexible membranes under hydraulic pressure, with opposing surfaces subject to identical fluid pressures. Proximeters are used to measure the deformations and the loads are increased in equal steps to failure.

Although this is the best system, its major disadvantage is, as for the lubricated steel platens, that tensile stresses cannot be generated. In addition, the accuracy of the proximeters is such that strains can only be computed to within 100×10^{-6} mm/mm.

1.2.3.4 Brush bearing platens

These platens, developed in detail by Hilsdorf (1965), have been used extensively and offer the best solution to obtaining all stress-states, including those which include tension. The platens consist of a series of closely spaced small steel bars which are flexible enough to follow the concrete deformations without appreciable constraint, but have sufficient capacity to transmit the loads to the specimen. To apply tensile loads, the platen is glued to the specimen using a

high strength, high modulus epoxy. It has been calculated that the average principal stresses should not deviate by more than 3 percent from values calculated under the assumption of no restraint, for properly designed platens (Kupfer et al., 1969). Nelisson (1972) has calculated a maximum deviation of 9%, but this is in a region very close to the platen-specimen interface.

An alternative approach was taken by Carino et al. (1974). A double row of closely spaced thin steel plates was used for the loading platen. Plates, as opposed to small steel bars, were used because of the simplicity of fabrication and because of the thin (25.4 mm) plate specimen which was used. That is, constraint through the depth of the plate was not considered to be critical to the results.

1.2.3.5 Flexible platens

These platens are described extensively by Schickert and Winkler (1972). The platens are composed of 16 - 24.7 mm square steel bars laid side-by-side in a 4 x 4 grid. The steel bars bear on an elastomeric pad. The results of this technique compare well with those of the brush bearing platens. However, as with the other methods, it is not suitable for the application of tensile loads.

1.2.3.6 Testing frames and systems

The best type of loading arrangement, for systems other than fluid cushion setups, is for the loads to be applied equally to opposite sides of the specimen. Translation of the specimen relative to the lines of action of the applied loads would not occur. This approach, however, is not practical because of the number of hydraulic actuators or cylinders which would be required.

The only alternative is to load from one side of the specimen only in each orthogonal direction. In this case the specimen will undergo rigid body translation in the direction of the load. Shear stresses are generated on the loaded surfaces which are parallel to this direction of load. Two methods are currently used to eliminate or reduce the magnitude of this interaction. Most investigators have relied on some sort of suspension system which would allow movement of one frame relative to the other. Vertical springs (Kupfer et al., 1969), cables from external frames (Nelisson, 1972) and pulley and counterweight arrangements (Schickert and Winkler, 1977) have all been used and are generally considered to be satisfactory solutions. Carino et al. (1974) and Linse (1979) have used testing frames which are fixed relative to one another and are relying on the flexibility of the platens (plate and brush bearing platens, respectively) to minimize the amount of shear.

All investigations to date have used loading methods whereby the load or deformation is controlled in one principal direction and the loads in orthogonal directions have been controlled so that the ratio of the principal stresses remains constant throughout the test. Kupfer et al. (1969) outline one of the most common arrangements for load control. The apparatus consists of a hydraulic pump and jack which loads a rigid beam. Hydraulic jacks reacting at each end of the beam power the hydraulic cylinders in the two test frames. By varying the position of the first jack, on the beam, the principal stress ratio is set for the entire test. Linse has used a similar system, with refinements, for loading in 3 principal directions. Nelisson has used an electro-hydraulic system, so that a constant stress ratio could be maintained electronically.

1.2.4 Conclusions from Previous Investigations

It is obvious that there is a definite relationship between the amount of constraint of the loading system used and the multi-axial strength of concrete. The results of the comparative study of the different testing methods (Gerstle et al., 1976) clearly indicate that this is true. A reasonably accurate representation of the "true" behaviour of concrete can be obtained, however, if reasonable care is taken to minimize the boundary constraints.

From his review of previous investigations, Nelisson (1972) has drawn up a list of requirements with respect to the characteristics of the loading system and the setup of the tests. Some of these requirements are:

(1) The state of stress throughout the specimen must be reasonably uniform.

(2) Stresses and strains should be directly calculated from the measured loads and deformations.

(3) All stress-states should be obtained in the same way and with identical specimens, so that a direct comparison of the response to different states of stress is possible.

1.3 Scope of the Project

As was stated in the introduction, the objective is to develop a bi-axial testing machine to determine the response of concrete specimens to compression-tension and tension-tension states of stress. In light of the results of previous investigations, the following criteria were set, a priori:

(1) The specimens will be concrete plates, approximately 200 mm square and 50 mm thick.

(2) The loading platens will be "brush bearing" platens, designed so as to minimize lateral restraint.

(3) The orthogonal loading systems will be independent and loads will be applied by electro-hydraulic actuators.

(4) The loads will be applied in such a way that the deformations in both principal directions are constant or in some other relationship with respect to time.

This latter requirement was decided upon for three reasons. Firstly, no research to date has been documented concerning this type of loading arrangement. Secondly, with adequate deformation control it may be possible to prevent specimen rupture under tensile loads so that the "complete" stress-strain curve can be obtained. Finally, since it is possible to obtain any deformation-time relationship using digital controls, the stresses resulting from any principal strain-time input can be directly measured. That is, strain-time measurements taken from, say, full scale beam tests could be programmed and the stress regimes derived directly.

The system will be designed such that a wide range of concrete strengths can be tested, using deformation rates which vary from very slow to very fast. In addition, all ancillary equipment relating to specimen preparation and test setup will be developed. Particular attention will be paid to methods of, and materials for testing concrete under direct tension.

CHAPTER 2

DESIGN AND CONSTRUCTION

2.1 General

After an extensive review of possible alternatives in both steel and concrete, a system consisting of two independent steel frames was selected. It had already been decided (Section 1.3) that the method of loading would be independent deformation control in both directions, and that brush bearing platens would be used. Several different methods of mounting the platens were considered. Spherical seats or flexible joints (Nelisson, 1972) would make alignment of the specimen and mating of the platen to the specimen boundary simpler. Both were considered to be impractical, however, because neither would be effective during the possible load reversals which can occur under bi-axial deformation control. A loss of control would be a definite possibility. Linse (1979) used a rigid connection which could be rotated, about the line of action, to facilitate mating of the platen/specimen interface. This too was considered to be impractical for two reasons. Firstly, it would be no more effective than a rigid, but properly aligned, connection since very small deviations at the mating surface can result in substantial differences in strain. In addition, the connection which would be necessary to maintain a reasonably stiff joint would add considerably to the size of the testing machine. A rigid connection of the platens to the testing machine was selected as the best alternative. Extra precautions must be taken, however, when

the opposing platens are aligned with respect to each other and with respect to the orthogonal platens.

In order to obtain independence of movement, several systems for supporting the frames were reviewed. Suspension systems, in which one frame may or may not be stationary, were rejected as a possibility because of their possible instability under high rates of deformation. Laboratory space limitations also restricted the selection to systems which do not require external or independent structures for support. Other considerations relating to ease of test specimen setup, mounting of the platens and compactness of the system necessitated that both frames should be capable of movement in the direction of load. Roller supports under each frame were selected as the best alternative. The supports were designed so that each frame could be moved, by hand, in its loading direction, but not laterally.

The principles by which the testing frames were designed are that they should be as compact as possible and that the longitudinal and lateral stiffness should be very high. Although electro-hydraulic deformation control may be considered equivalent to an infinitely stiff system, friction and inertia of the actuator and attached loading devices will negate its effectiveness, particularly under high rates of deformation. Since a reasonably uniform state of stress throughout the specimen is required, unsymmetric deformations of the frame due to manufacturing tolerances and eccentric loads on the specimen must be minimized. To this end, the reacting structures were designed to be as stiff as possible, within the constraints dictated by dimensional considerations, availability of materials and ease of

fabrication. Special attention was given to the design of all connections, as these are often the controlling factor in the performance of any testing machine.

2.2 Design and Construction of Brush Bearing Platens

The platens were designed to be similar to those used by Kupfer et al. (1969). Material availability and ease of fabrication were the main considerations in the selection of 3.20 x 9.5 mm ($\frac{1}{8}$ IN. x $\frac{3}{8}$ IN.) cold-rolled steel flat bar (avg. F_Y = 325 MPa) for the individual rods. A clear space between bars, in both directions, of .152 mm was chosen arbitrarily. Figure 2.1 shows the configuration of the loading surface of the platens which was used for design purposes.

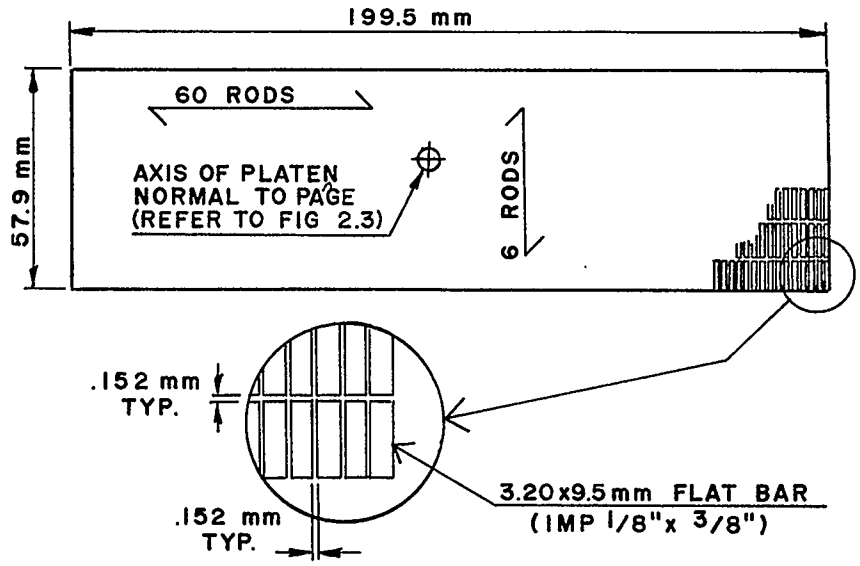

FIGURE 2.1 CONFIGURATION OF PLATEN LOADING SURFACE

Four sets of platens were manufactured: Two for tensile stresses (one for each test frame) and two for compressive stresses. The rods were designed as free-standing cantilevers. The axial load on

each rod was assumed to be the average concrete stress multiplied by $[(3.2 + .152) \times (9.5 + .152)] = 32.2\ mm^2$.

2.2.1 Design Length of Tension Rods

The rod length was calculated such that a lateral deformation of 5.0 mm across the weak axis, at the free end, could be accommodated without exceeding the yield strength of the rod. A minimum yield strength of 250 MPa was calculated assuming a 1% level of significance and a coefficient of variation of 10% of the average yield strength supplied. The value of 5.0 mm maximum lateral deflection is based on the assumption that the orthogonal actuator will move through its full calibrated range (Section 2.6) without movement of its testing frame, as could occur under high rates of deformation. Using standard formulas from structural analysis, a design length greater than 138 mm was required. A final length of 150 mm was selected for both platen sets.

2.2.2 Design Length of Compression Rods

An initial rod length was calculated assuming a factor of safety of 2 with respect to buckling of a free-standing column. The concrete strengths chosen as a basis for the design of the two platen sets were 25 MPa and 35 MPa. Rod lengths of 90 mm and 75 mm, respectively, were selected. Table 2.1 lists the theoretical factor of safety against buckling for various levels of concrete stress.

The maximum flexural stress in the rods was calculated using standard formulae which account for the effects of axial load and was found to be less than the minimum yield strength. For these calculations, the rods were assumed to be fixed/pinned columns acted upon by

TABLE 2.1

STABILITY SAFETY FACTORS FOR

ROD LENGTHS OF 90 MM AND 75 MM

Concrete Stress (MPa)	Stability Safety Factor	
	L = 90 mm	L = 75 mm
20	2.4	3.5
30	1.6	2.3
40	1.2	1.7

the full design loads and subjected to a maximum lateral displacement, at the pinned end, of 1.0 mm. A deflection of 1.0 mm of the outermost rod of the platen would represent a transverse tensile strain in the concrete specimen of 10.0×10^{-3}.

The fabrication tolerances for alignment of the rods with respect to the line of action were set, after consultation with the technical staff, to a maximum of 0.5 mm over the length of the rod. The maximum flexural stress was recalculated and was found to be below the specified minimum yield strength. The buckling load, however, was reduced by approximately 29%. The calculated maximum concrete stress at the point of instability was 34 MPa and 49 MPa for rods 90 mm and 75 mm long, respectively. It is suggested that the platens with 90 mm rods should not be used for testing concrete specimens for which the anticipated level of stress is greater than 30 MPa.

2.2.3 Platen Heads

In order to transmit the load from the piston to the platen loading surface, the rods were soldered to a depth of 45 mm into a solid

steel head. The heads were designed such that the deformation from the outer edge to the centreline of the platen would represent a strain differential in the specimen of less than 50.0×10^{-6}. The analysis was carried out assuming a uniformly distributed load equal to the maximum capacity of the actuator divided by the width of the platen.

To mount the platen assembly on the piston or load cell, a 51 mm diameter threaded hole, 50 mm deep, was machined into the base of the platen head.

2.2.4 LVDT Mounts

It was decided that in order to maintain adequate deformation control at all levels of strain and at all rates of deformation, the measurement and control of deformations should be by LVDT mounted directly across the specimen. That is, deformations would be measured between the loading surfaces of opposing platens. In order to mount the LVDT, the central column of rods in each platen were replaced with 3.20 x 57 mm ($\frac{1}{8}$ IN. x $2\frac{1}{4}$ IN.) cold rolled steel plate. The plate was widened at the free end to facilitate attachment of the LVDT mounting bracket (Section 2.6).

2.2.5 Fabrication and Assembly

The final dimensions and fabrication notes for the platen heads are shown in Figure 2.2 and details of the assembled platen sets are given in Figure 2.3.

The platen heads were cut to size in a lathe. To ensure alignment of the platen assembly, the base and threaded hole were machined in one operation. The rod bearing surface and the lips of the cavity

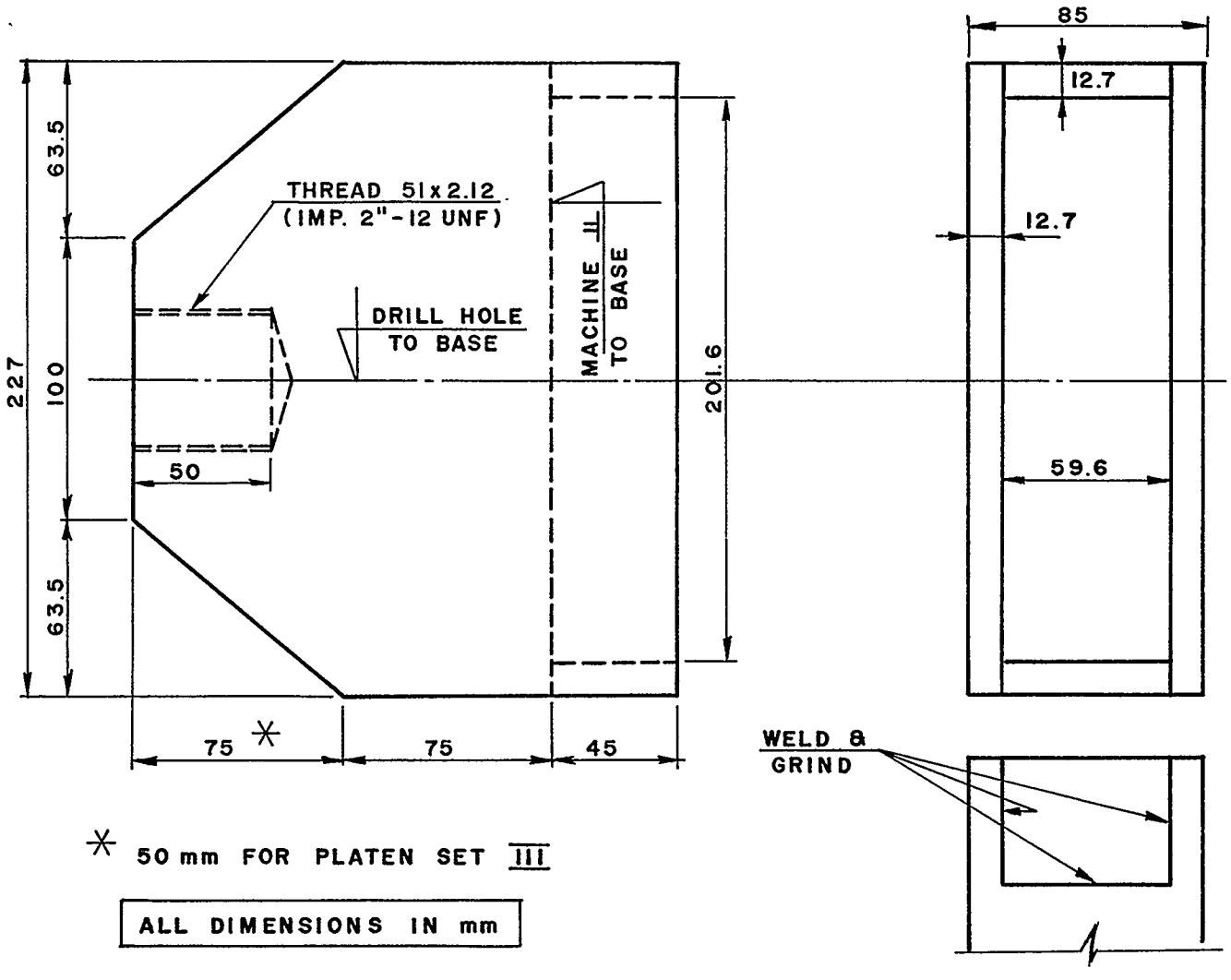

FIGURE 2.2 PLATEN HEAD DIMENSIONS AND FABRICATION NOTES

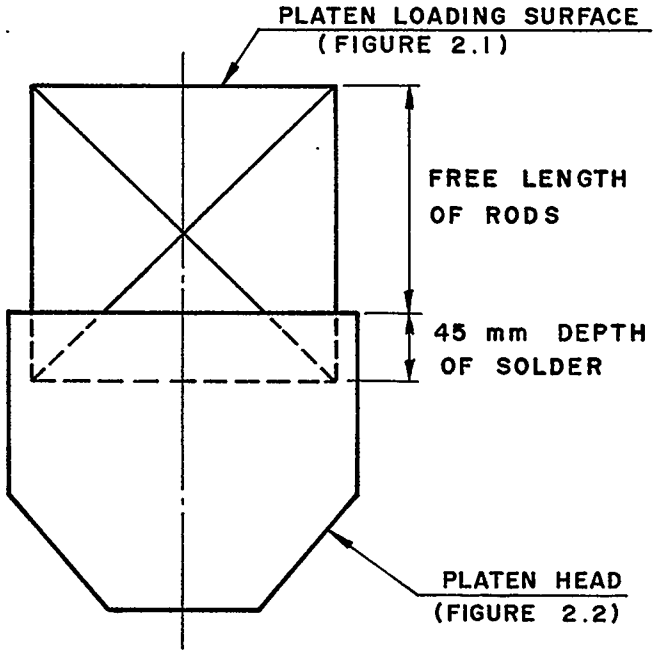

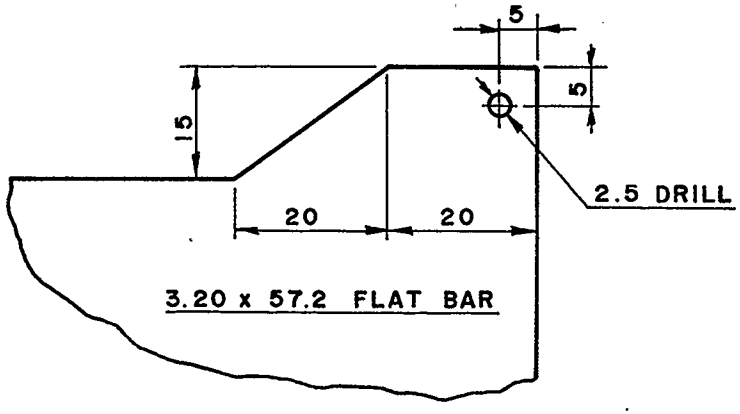

DETAIL OF CENTER PLATE
WITH LVDT MOUNT

PLATEN SET	ROD LENGTH (mm)	
I	75	
II	90	
III	150	(FRAME 2 ONLY)
IV	150	(FRAME 1 ONLY)

FIGURE 2.3 ASSEMBLED PLATEN DIMENSIONS

into which the rods would be assembled were milled parallel to the base. The ends to the cavity were then welded in place. A completed platen head is shown in Figure 2.4a.

The flat bar stock for the rods was rough cut approximately 3 mm oversize, deburred and straightened. One end of each rod was fluxed and tinned to facilitate soldering. Strips of .152 mm (.006 IN.) stainless steel shim stock were cut and used to space the rods in each direction as they were loosely assembled in the platen head (Figure 2.4b). The rods were clamped together and held vertically with a special jig (Figure 2.5a). The technical staff performing this work would guarantee the alignment of the rods, with respect to the axis of the platen, only to within .5 mm over the length of the rod. The final deviation from vertical averaged .3 mm for the two sets of compression platens. To solder the rods securely in the cavity of the platen head, the entire assembly was placed in an oven and heated to the melting point of the solder. The cavity was then filled with solder (Figure 2.5b), the oven was turned off and the platen was left to slowly cool to room temperature.

The loading surface of the platen was milled parallel to the base of the unit (Figure 2.6a). To prevent burrs from being knocked between the rods, shim steel was placed in the gaps. Completed platen set IV is shown in Figure 2.6b.

2.3 Design and Construction of the Testing Frames

Both testing frames basically consist of two, heavy steel crossheads held apart by four steel posts arranged in a square. Each frame is a closed system with an actuator attached to one crosshead and the

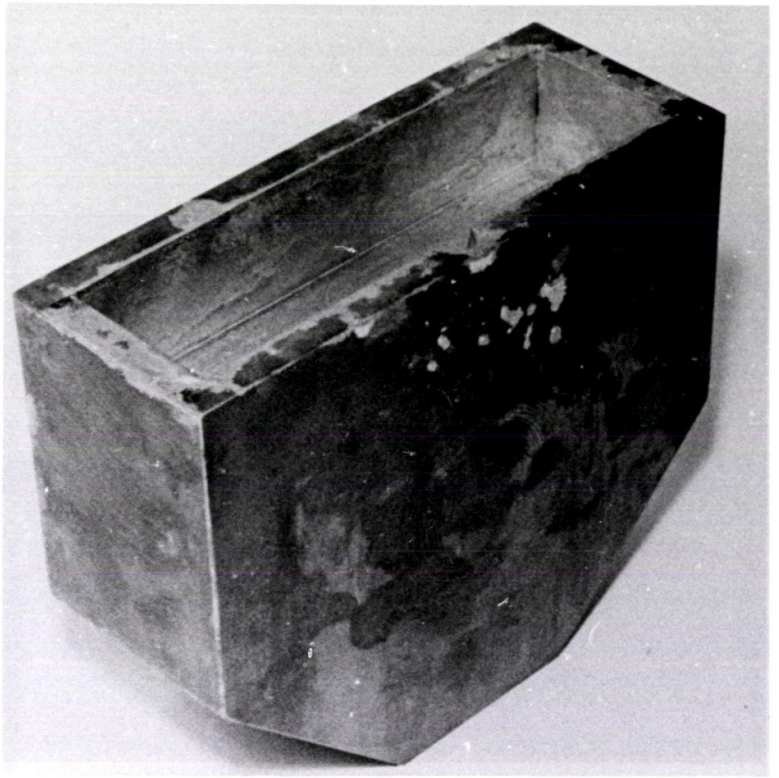

FIGURE 2.4a COMPLETED PLATEN HEAD

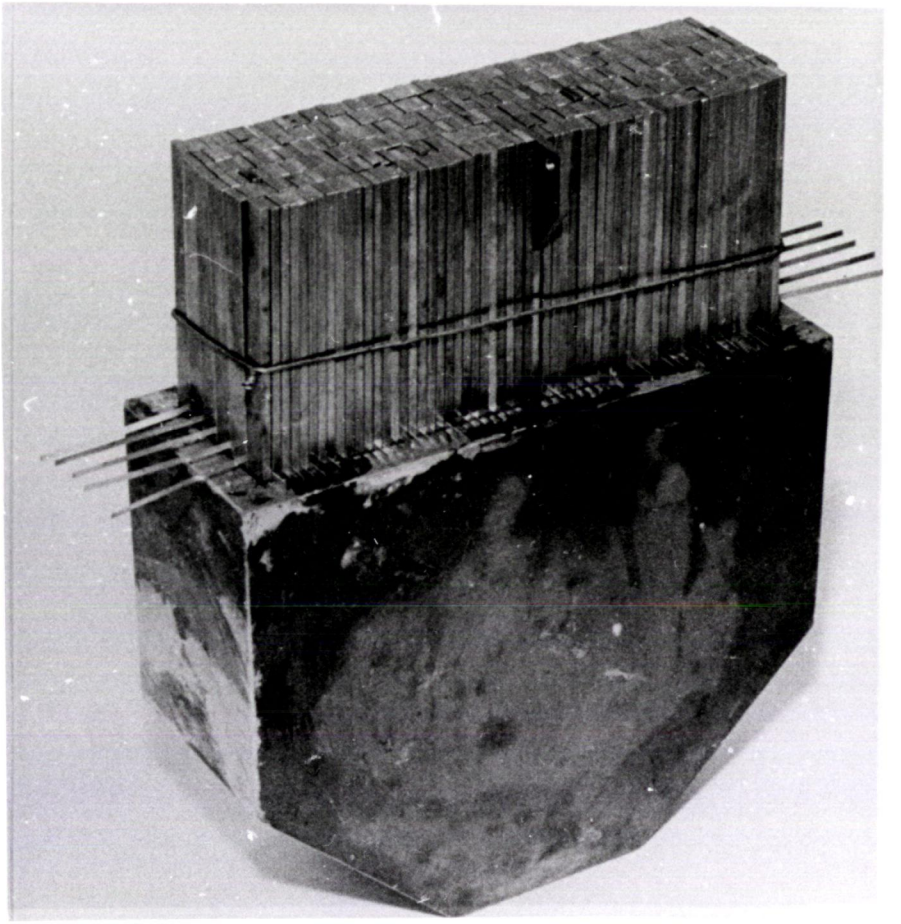

FIGURE 2.4b PLATEN HEAD AND LOOSE ASSEMBLY OF INDIVIDUAL RODS

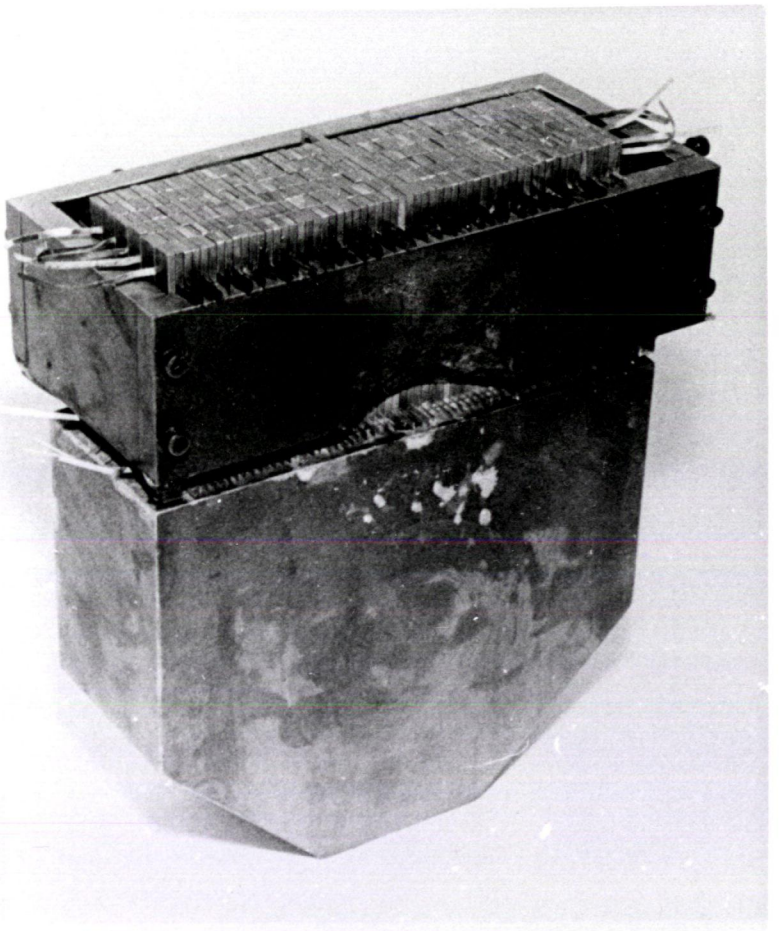

FIGURE 2.5a JIG USED FOR HOLDING RODS IN PLACE FOR SOLDERING

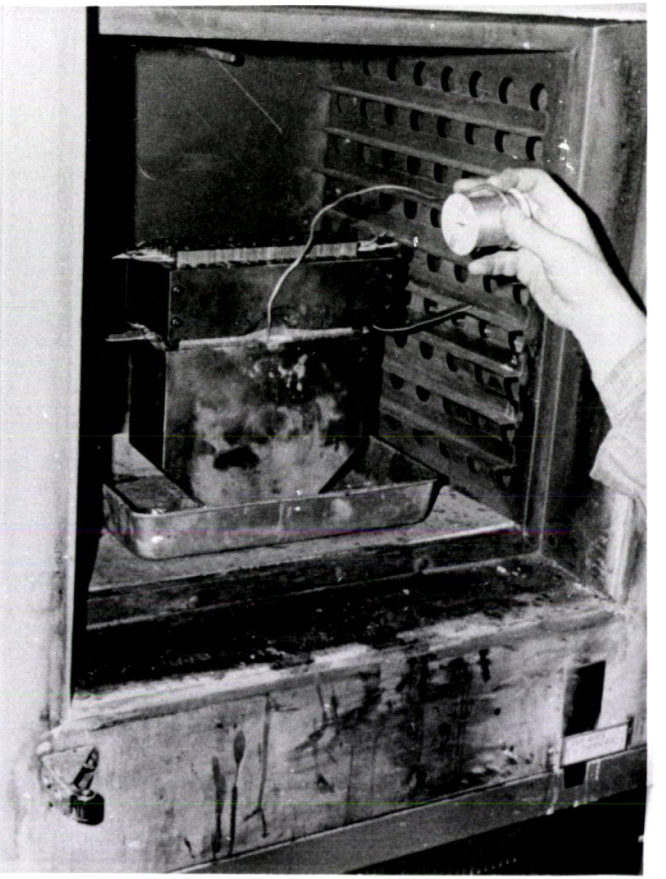

FIGURE 2.5b SOLDERING OPERATION

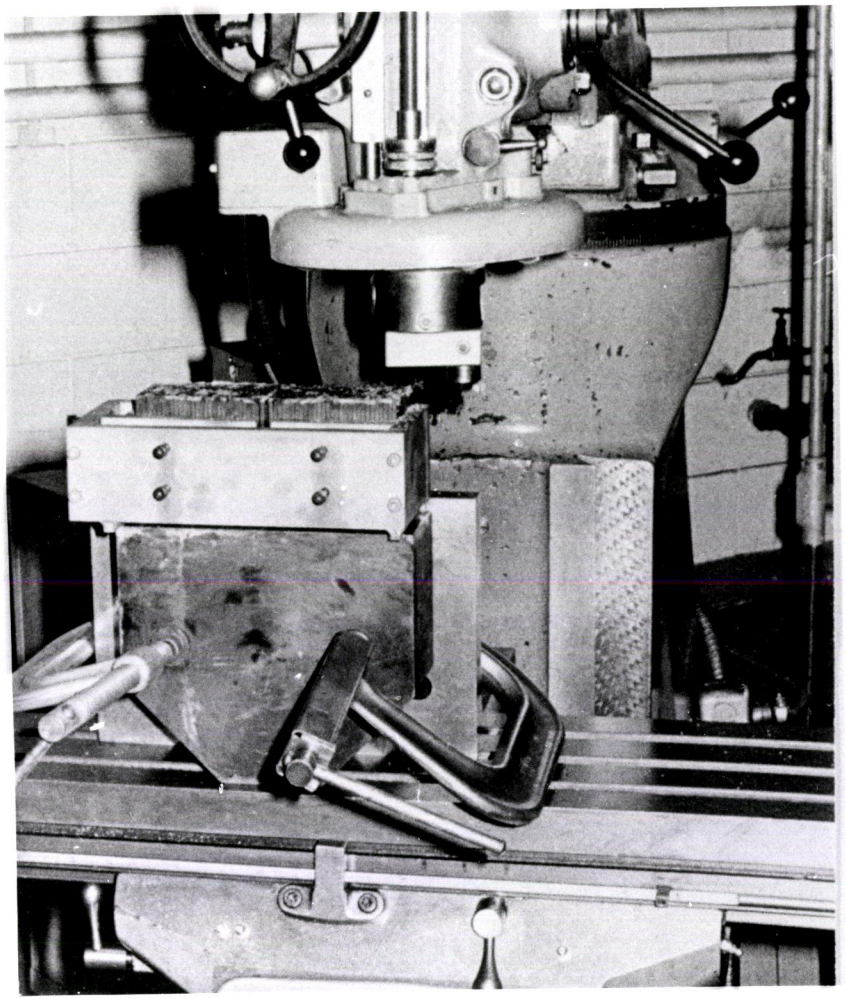

FIGURE 2.6a MACHINING OF THE LOADING SURFACE

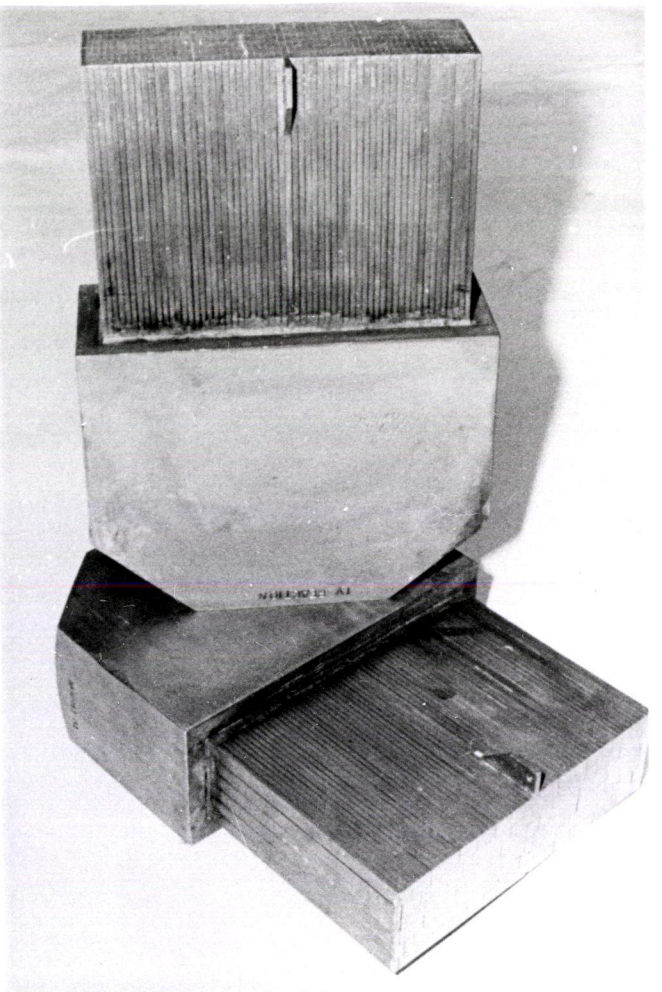

FIGURE 2.6b COMPLETED PLATEN SET IV

load cell attached to the other. The frames are independently supported. The details of the frame supports will be discussed in Section 2.4. The overall dimensions of each frame were arrived at on the basis of producing as compact a unit as possible. The critical dimensions are shown in Figure 2.7. Henceforth, the smaller testing frame, designed for mainly tensile loading, will be referred to as Frame 2 and the larger frame, designed for mainly compressive loading, will be referred to as Frame 1.

Two views of the assembled testing machine are presented in Figures 2.8a and 2.8b.

2.3.1 Design of Crossheads

Based on considerations of the (predetermined) geometry of the testing arrangement and the recommended method for mounting the MTS system actuators, the best method for maintaining low compliance was to transmit the forces from the actuator mounting bolts to the reacting posts through heavy shear plates or webs. In addition to the stiffness of the crosshead, two other factors were important in the selection of 51 mm (2 IN.) ASTM-A36 steel plate for the crosshead material. The size (25 mm) and spacing of the mounting bolts determined, to some extent, the thickness and location of the shear plates necessary to provide sufficient strength in the connection. In addition, to prevent warping of both the base plate, to which the webs were welded, and the webs themselves, under the welding and extensive machining required during fabrication, a 50 mm thickness was necessary. The final dimensions for the crossheads for both Frames 1 and 2 are shown in Figure 2.9. The reacting crossheads are the same as the

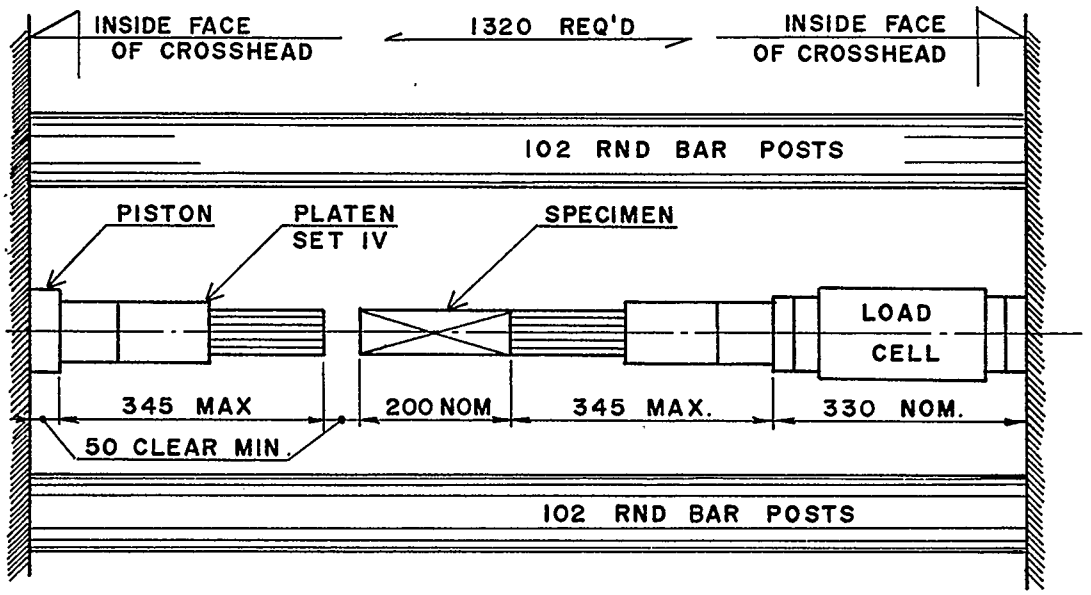

(a) Frame "1" Longitudinal Dimensions

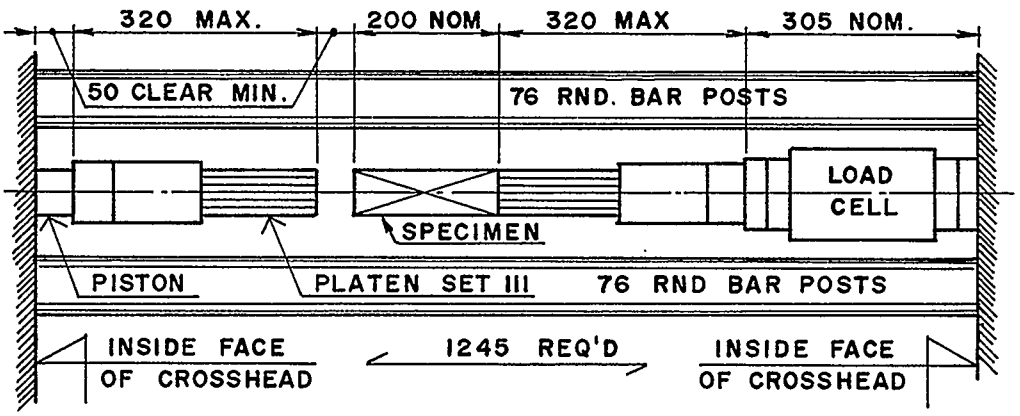

(b) Frame "2" Longitudinal Dimensions

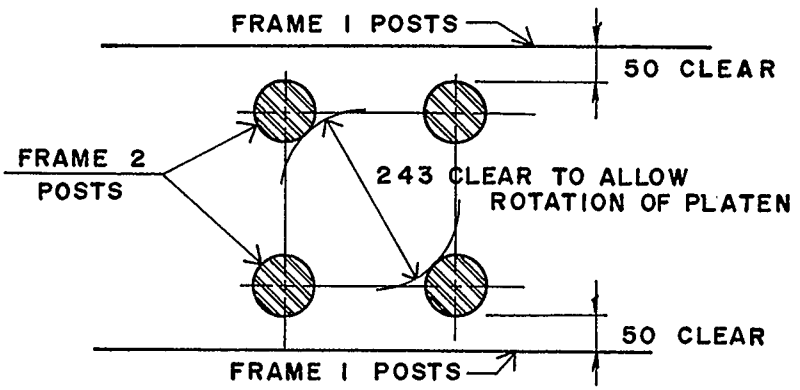

(c) Frame "2" Cross-sectional Dimensions

FIGURE 2.7 MINIMUM DIMENSIONS FOR SIZING OF TESTING MACHINE FRAMES

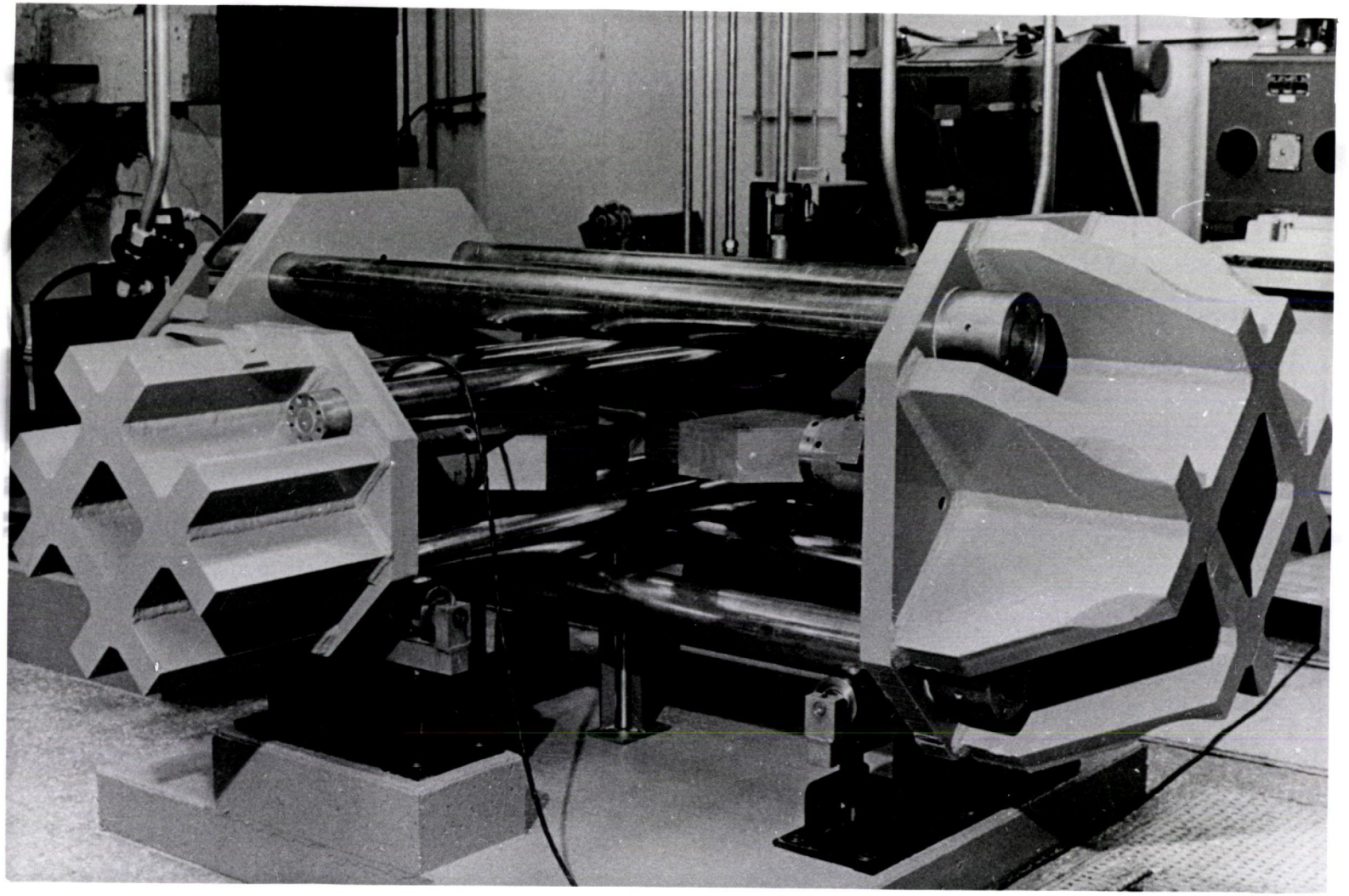

FIGURE 2.8a OVERALL VIEW OF ASSEMBLED TESTING MACHINE (1)

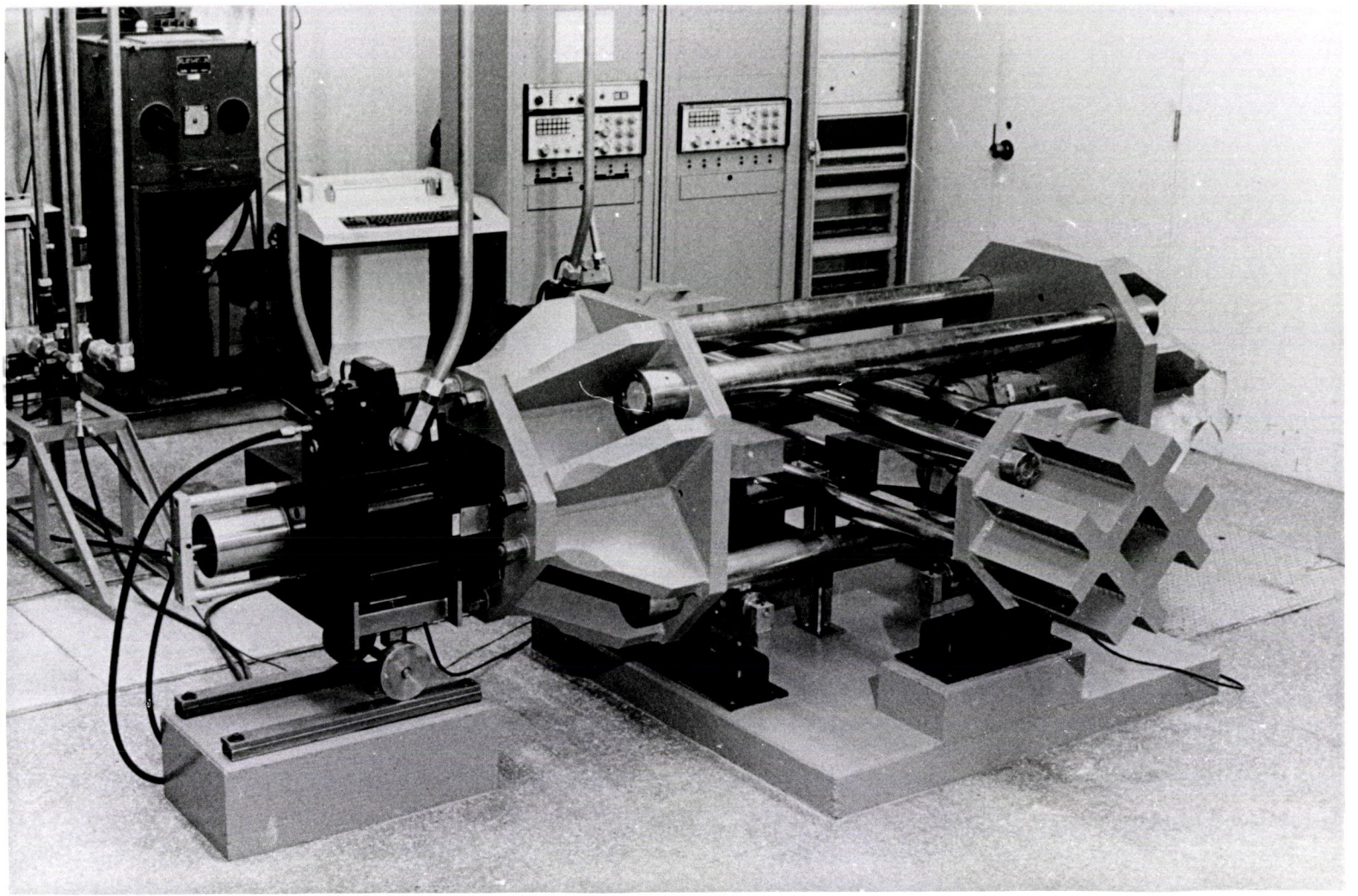

FIGURE 2.8b OVERALL VIEW OF ASSEMBLED TESTING MACHINE (2)

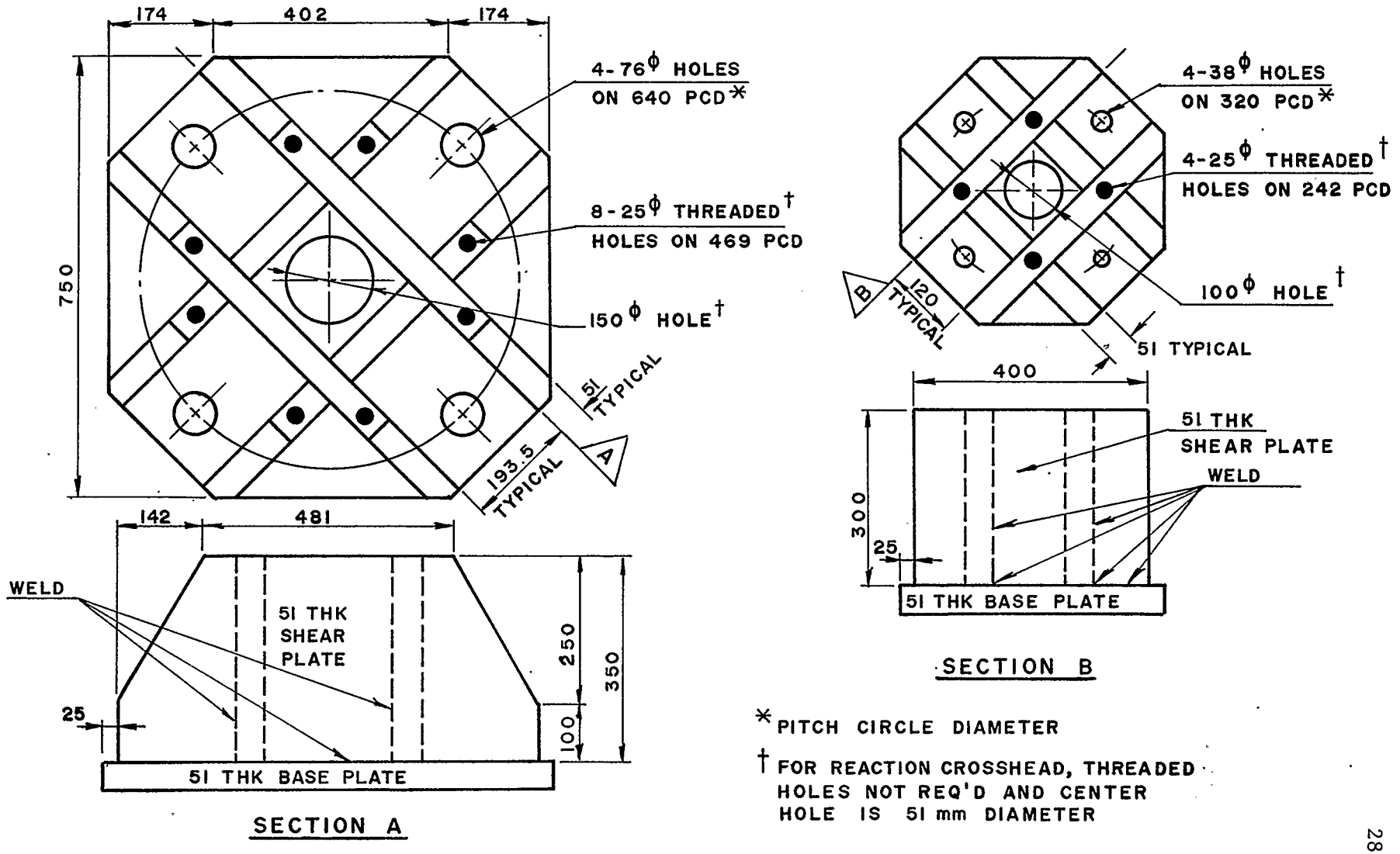

FIGURE 2.9 CROSSHEAD DIMENSIONS FOR FRAMES 1 AND 2

loading crossheads except for special provisions for mounting of the load cell and reaction platen assembly.

The depths of the shear webs were chosen so that the deformation of the crossheads at the points of load application would be minimized. The crossheads were idealized as being composed of 4 structurally independent prismatic beams. The beams were assumed to be rigidly interconnected at the centre of an "X" arrangement and the opposite end of each beam was assumed to be fixed to one of the 4 longitudinal posts. The structural configuration and crosssections of the prismatic beams are shown in Figure 2.10. The analysis was carried out, for various depths of shear web "D", accounting for shear and axial deformations. The results of the analyses are plotted in Figure 2.11.

The decrease in overall stiffness with increasing shear web depth is due to the predominance of the decreasing axial stiffness of the webs over the increasing bending stiffness resulting from increased web depth. This is not apparent for the reacting crossheads as these loads are applied at the base plate and not through the shear webs.

2.3.2 Fabrication of Crossheads

The individual pieces were flame-cut to size, except for holes which were burned 10 mm undersize on the diameter, by the steel supplier. All mating surfaces were accurately machined and the base plate was turned down and scored to facilitate precise assembly of the webs. The webs were welded to the base plate with a continuous 20 mm double bevel groove weld and were welded to each other with continuous 20 mm double fillet welds. The assembled units were machined on both sides,

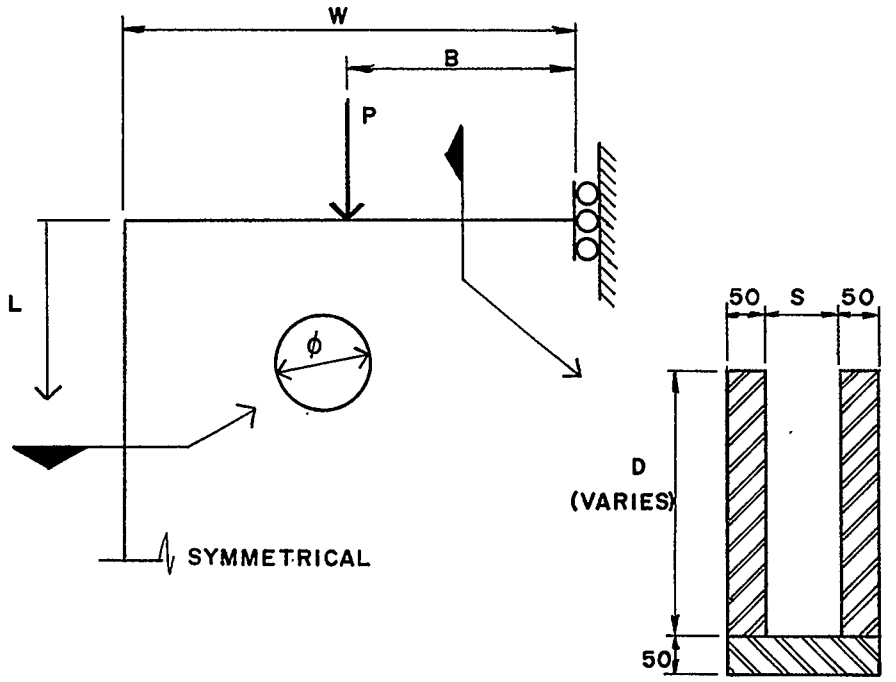

FRAME	S (mm)	ϕ (mm)	W (mm)	B (mm)	L (mm)
NO. 1	195	102	200	80	1370
NO. 2	120	76	75	0	1300

FIGURE 2.10 TESTING MACHINE IDEALIZATION

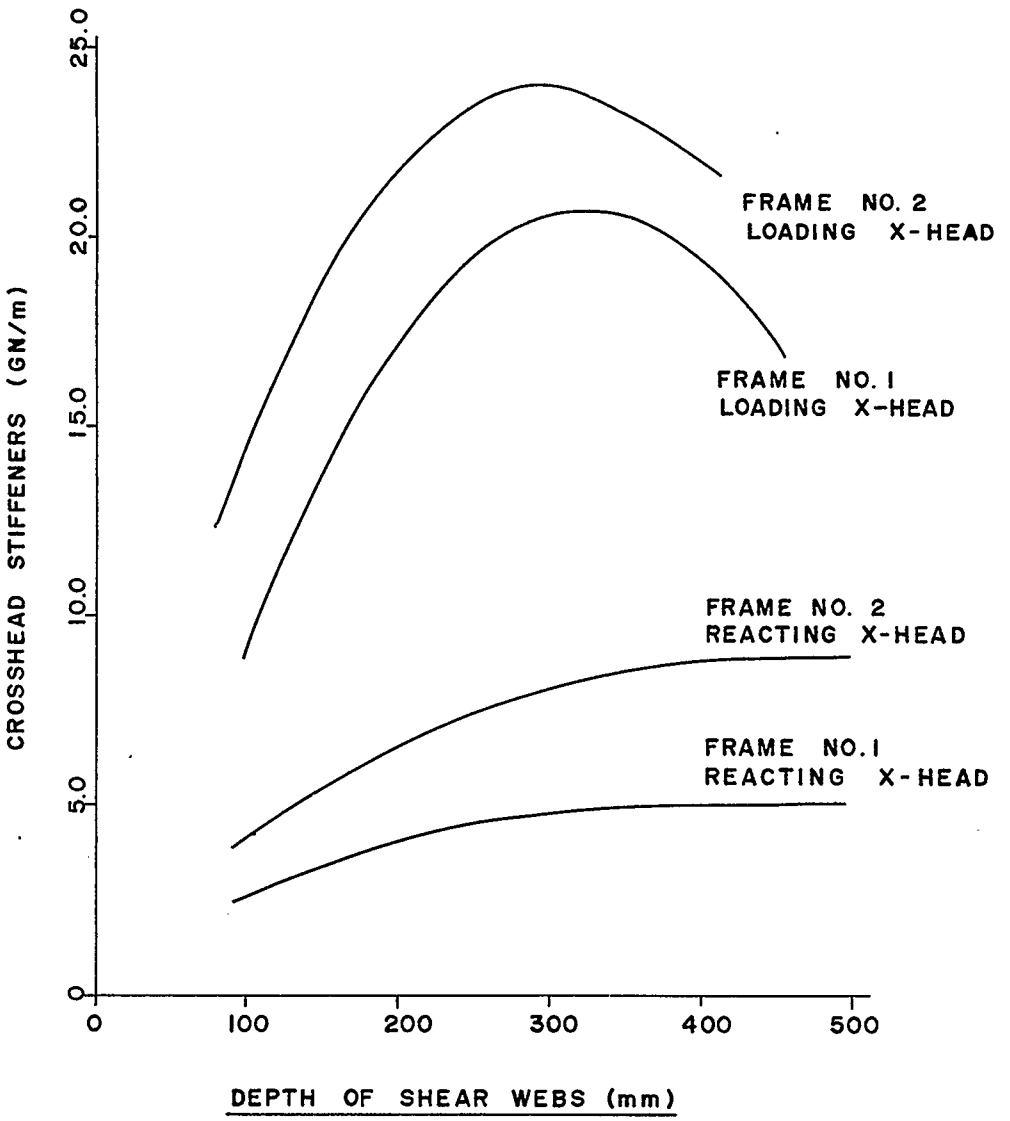

FIGURE 2.11 RESULTS OF ANALYSIS OF
IDEAL TESTING MACHINE STIFFNESS

in a lathe, so that the bearing surfaces for the posts and the actuator or loaded mounting plates were flat and parallel. All holes were subsequently bored, or drilled, and all threads were cut perpendicular to the mating surfaces in a vertical head milling machine.

2.3.3 Design and Fabrication of Longitudinal Posts

The selection of 102 mm (4 IN.) and 76 mm (3 IN.) cold finish steel round bars for the posts for Frames 1 and 2, respectively, was based primarily on considerations of the size of thread and nut required to maintain a sufficiently rigid connection without yielding of the material. The flexural stiffness of the posts was also a major consideration, although a rigorous analysis was not carried out.

The posts were turned in a lathe and the bearing surfaces at each end were cut flat and parallel to each other. The threads were cut at the same time. Production methods were used so that the distance between bearing surfaces for all four posts varied by no more than $\pm$0.20 mm. The final dimensions for both sets of posts are shown in Figure 2.12.

2.4 Testing Machine Support System

As described earlier, each frame is supported independently on adjustable roller supports. After consideration of several alternatives, it was decided to use a system in which the bottom posts of the frames were supported on 4 independent rollers, running on ball bearings, which were adjustable in the vertical direction.

The roller supports were sized so that the length of contact between the post and the roller was approximately 25 percent of the circumference of the post. The roller bearings used were selected

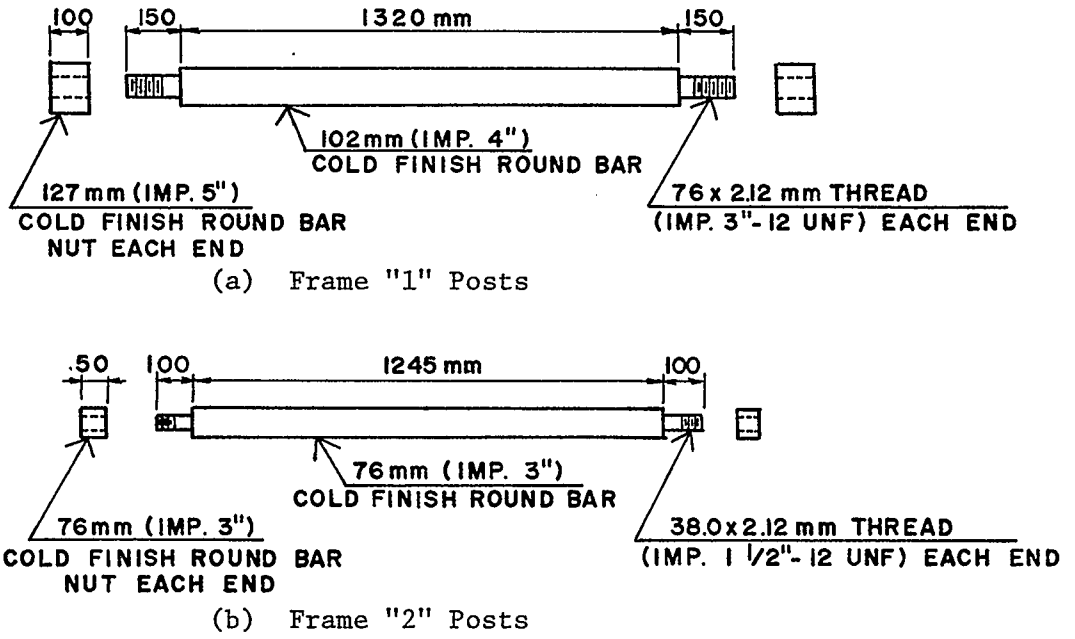

FIGURE 2.12 LONGITUDINAL POSTS FOR FRAMES 1 AND 2

on the basis of their static load capacity as well as their resistance to static wear. A threaded bar was attached to the base of the assembled unit to facilitate vertical adjustment of the roller support. The mounting base and roller support assemblies are shown in Figure 2.13. To prevent damage to the rollers due to excessive movement of the frames, large stops were placed on the mounting bases.

2.5 Loading System

The MTS electro-hydraulic system was used throughout. A 500 kN double acting actuator and a 155 kN double acting actuator were used for Frames 1 and 2, respectively. The actuators were attached to machined mounting plates which were bolted to the crossheads with 25 mm bolts. All bolted connections were prestressed so that there would be

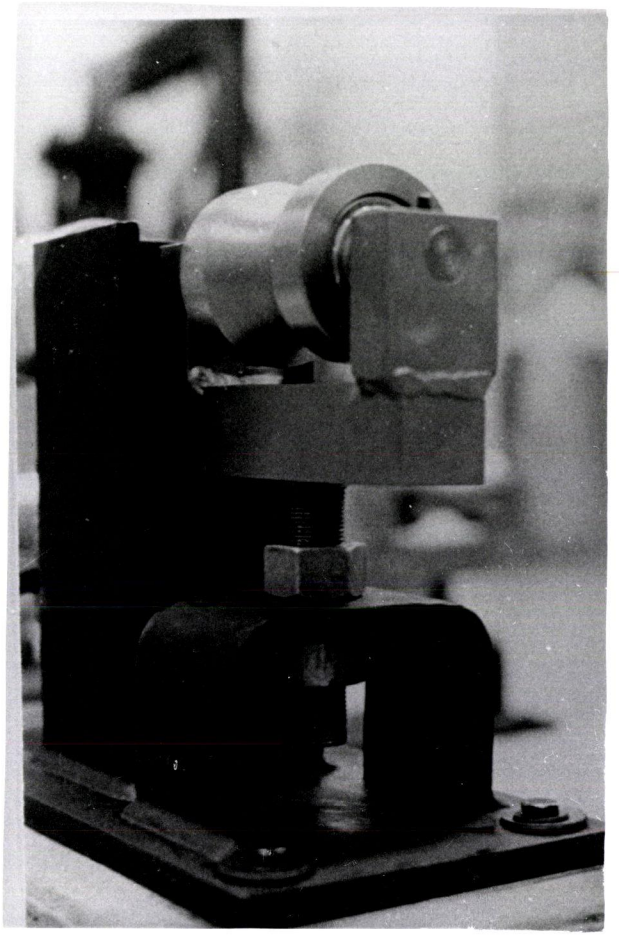

(a) Detail of Roller

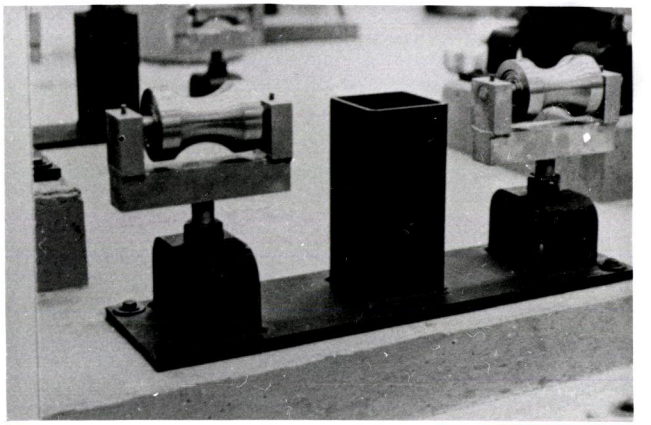

(b) Frame 1

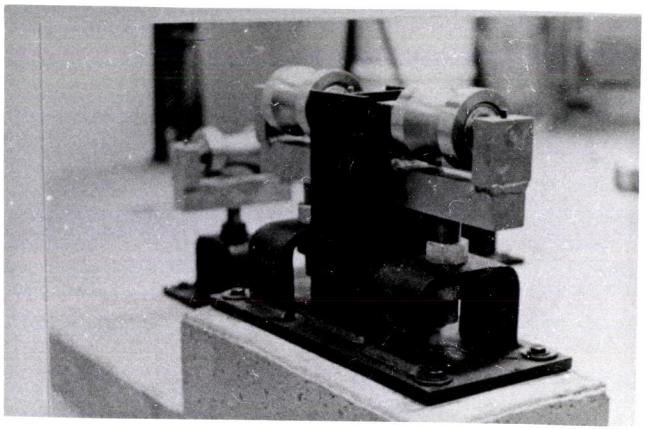

(c) Frame 2

FIGURE 2.13 ROLLER SUPPORT ASSEMBLIES FOR FRAMES 1 AND 2

no separation of the bearing surfaces under the full rated capacity of the actuators.

To prevent tipping of the frames in the long direction and in order to maintain uniform loading of all four roller supports, carriages were designed to support the full weight of each actuator. Each carriage was supported on steel wheels running on cold finish steel flat bar. A system similar to that used for the roller supports was used to allow vertical adjustment of each wheel of the carriage.

The design of the hydraulic plumbing connecting the actuators with the supply line presented some difficulties. In order to facilitate free movement of the actuators, both under load and during setup, and to allow easy access to all areas of the testing machine, an overhead arrangement of stainless steel piping was used. The dimensions of the system were based largely on the necessity of preventing excessive stressing of the threaded couplings. To prevent blowouts at the connectors due to hydraulic hammer, bracing of the pipes was necessary. Rubber shims were used under all brace clamps. Figure 2.14 shows the configuration of the plumbing and the valve attachments at the line "tamer".

2.6 Miscellaneous Equipment

As indicated in Section 2.2.4, LVDT's mounted at the ends of the platens were to be used for deformation measurement and control. The LVDT's selected are capable of resolving deformations to within .001 mm, representing a specimen strain of approximately 5.0×10^{-6}, and have a maximum range of ± 5 mm. Details of the LVDT mounting brackets are shown in Figure 2.15a. An LVDT mounting bracket, consisting of opposing

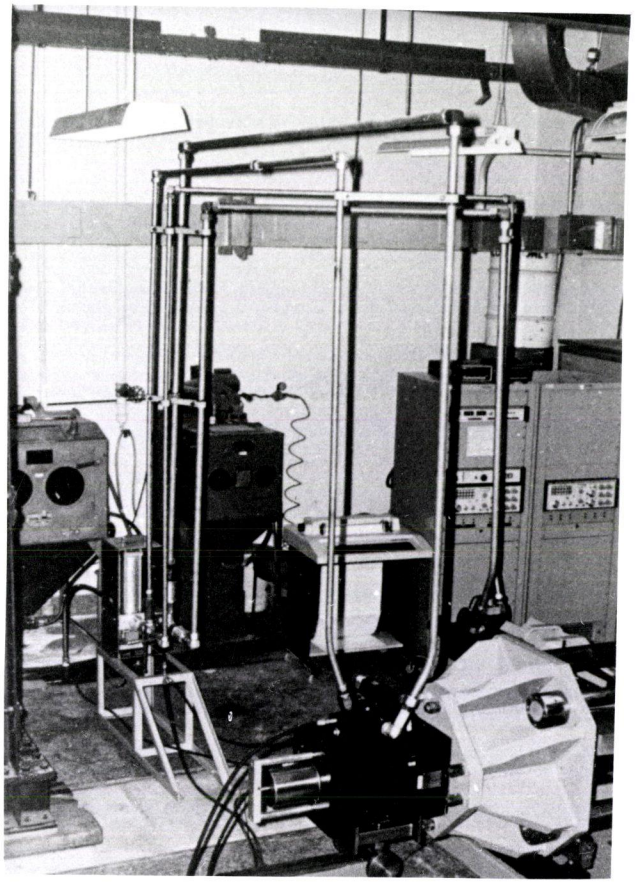

FIGURE 2.14a HYDRAULIC PLUMBING SYSTEM

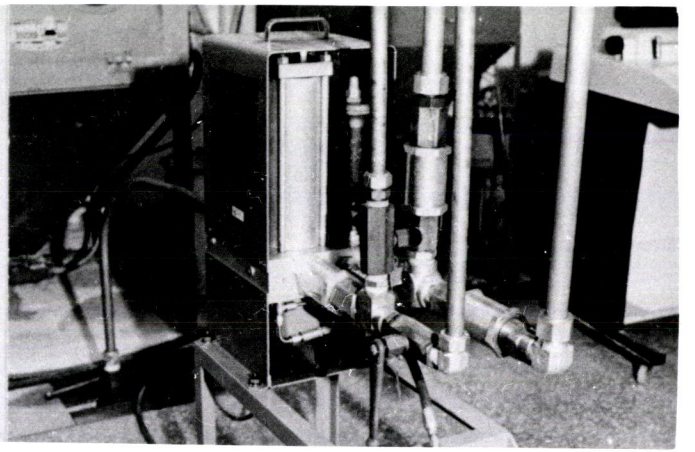

FIGURE 2.14b HYDRAULIC VALVES AT LINE "TAMER"

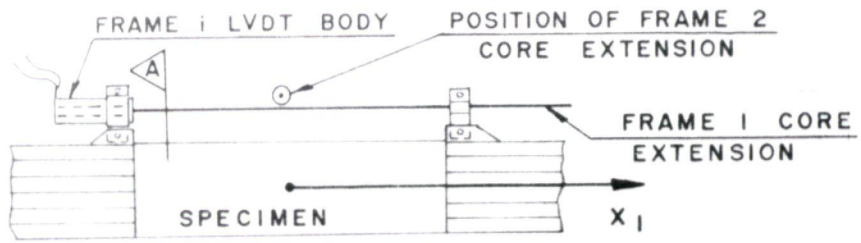

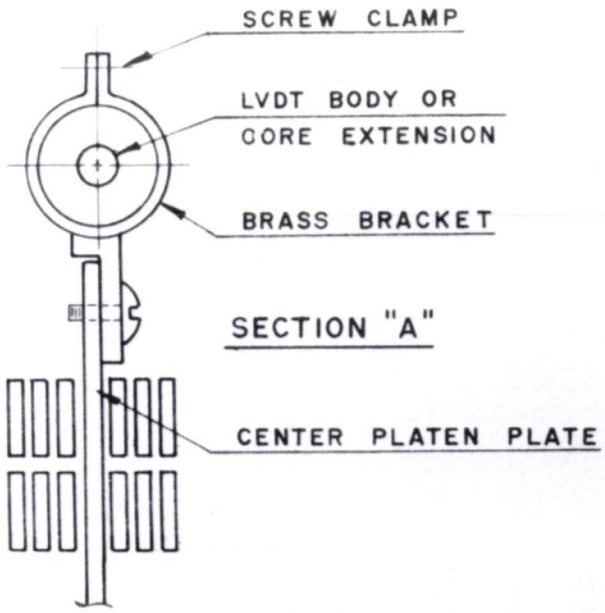

(a) LVDT Mounting Bracket and Setup

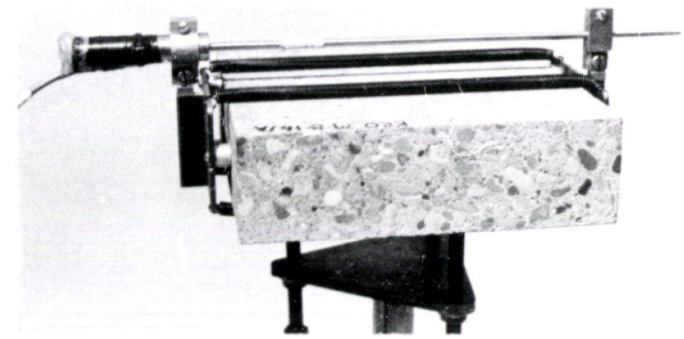

(b) Lateral Strain Measuring Device

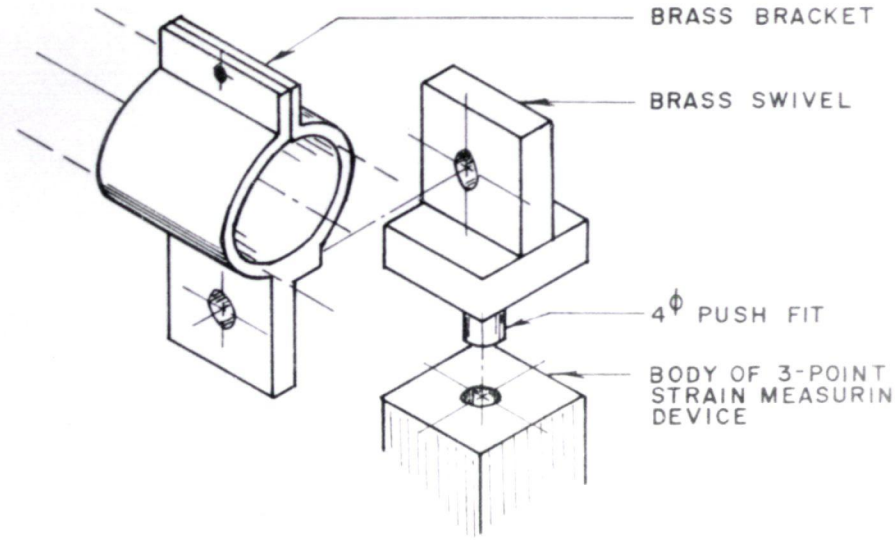

(c) Detail of Swivel for Lateral Strain Measuring Device

FIGURE 2.15 LVDT MOUNTING BRACKETS

plates sprung across the specimen, was used to measure transverse strains when carrying out uni-axial tests (Figure 2.15b). The plates were bearing against the specimen, at 3 points, on 10 mm long stub legs. A swivel (Figure 2.15c) was required for both the LVDT body and core brackets in order to facilitate alignment of the core in the body and to prevent sticking of the core.

A special device was designed for deformation measurement through the depth of the plate specimen. A double lever arrangement, bearing on the specimen at one end and measuring deformations at the other end with an LVDT, was chosen from several possibilities. The LVDT used is capable of resolving deformations to within .0015 mm which represents an equivalent specimen strain of approximately 25×10^{-6}. Details of the measuring device are shown in Figure 2.16.

To mount the load cell to the reacting crosshead, the load cells were fitted with long bolts which were tightened sufficiently to prevent separation of the connection under load. The assembly was then inserted through the hole in the center of the crosshead and a large nut was used to tighten the unit securely to the base plate. A bolt, inserted and fastened to the other end of the load cell in a similar manner, was used to mount the reacting brush bearing platen.

2.7 Assembly and Alignment of the Testing Machine

To obtain the approximate elevations for the frame and actuator supports and to raise the working surface off the laboratory floor, concrete pads were poured. The frames were assembled in place and all bolted connections (actuator mounting bolts and post connections) were torqued so that there would be no separation of the joints under the

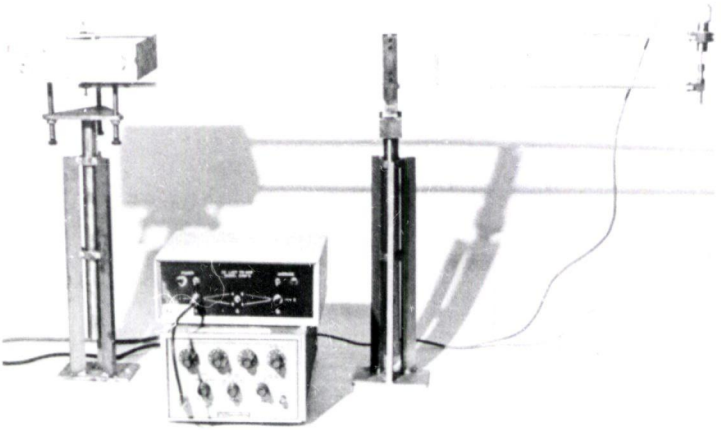

(a) Assembled Strain Measuring Device and Electronics

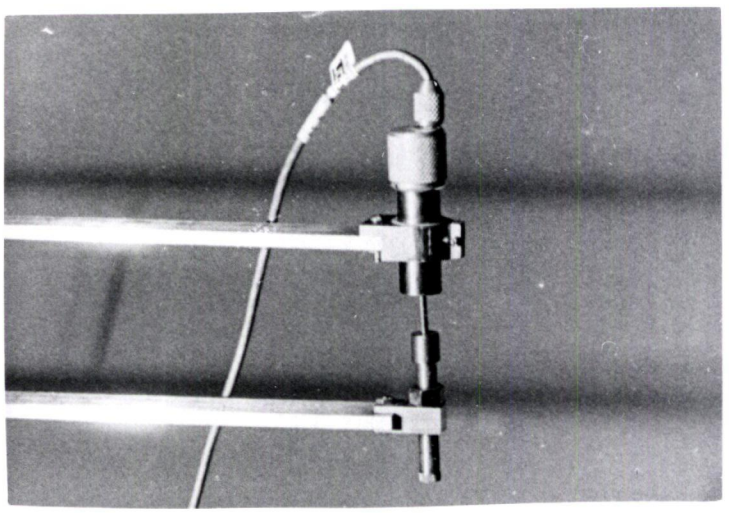

(b) Detail of LVDT and Mounting Bracket

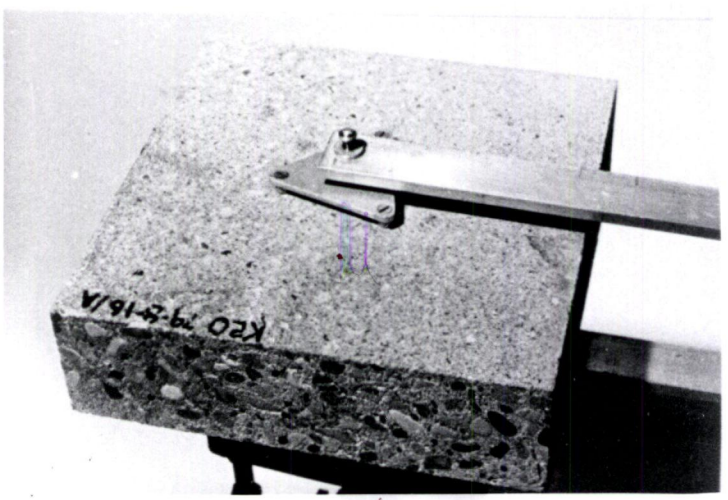

(c) Detail of 3-point Bearing at Specimen

FIGURE 2.16 TRANSVERSE STRAIN MEASURING DEVICE

full rated load of the actuator. The undercarriages and the roller supports were then adjusted so that the frames were bearing (approximately) evenly on all rollers. The frames were subsequently levelled to within 5 mm/m longitudinally and transversely, and adjusted so that the longitudinal axis of Frame 2 was perpendicular to (within .5 mm/m), and in the same plane (within .5 mm) as the longitudinal axis of Frame 1. Alignment was based on the relative position of the mounted brush bearing platens.

CHAPTER 3

EXPERIMENTATION

3.1 General

The experimental program comprised a total of 52 tests, 13 in Series I and 39 in Series II, of which six tests were used as a basis for verification that the testing machine was capable of testing concrete within the constraints listed in Chapters 1 and 2. In addition to experimentation, the verification program also consisted of extensive measurements of the testing configuration to refine the alignment of the two frames. As a result of these measurements, modifications to the testing machine and to the methods of testing were required. Also encompassed in the scope of the investigation was the selection of the best method of specimen preparation and the choice of the bonding agent for carrying out direct tension tests. A number of different approaches was used for both problems.

As was indicated in Chapter 1, it is imperative, if accurate results are to be obtained, that the strain (stress) distribution throughout the specimen should be uniform. In order to achieve the desired uniform distribution in a fixed-fixed testing machine, the herein described system, the platens must be (almost) perfectly aligned and the specimen must be so prepared that the loaded surfaces are in full contact with the platens. A value of .01 mm in 200 mm was chosen initially as a reasonable value for the alignment of the platen-specimen-platen system. This represents a strain

differential across the specimen of 50 x 10^{-6} maximum, assuming rigid connections. Unfortunately, however, it has proven to be unrealistic to assume that these tolerances were possible.

After numerous attempts, the platens were eventually aligned to within .1 mm in 200 mm, representing a maximum strain differential of 500 x 10^{-6}, which is unacceptable, vis-a-vis direct loading of the specimen surface. Furthermore, it was determined that although it was possible to obtain the desired tolerances on the specimen dimensions by using specialized equipment and techniques, a lapping wheel and simple jig could be used to obtain tolerances less than .2 mm in 200 mm. The solution to the problem was to use a thin layer of high modulus, high strength epoxy to act as an interface between the platen and the specimen. Although the procedures involved are somewhat more complicated than anticipated, the process has proven to be quite successful.

3.2 Concrete Mix Design and Specimen Preparation

Three concrete mixes were developed, having nominal 28-day cylinder strengths of 20, 30 and 40 MPa. CSA Type 10 Normal Portland Cement and 12.7 mm ($\frac{1}{2}$ IN.) maximum size river gravel were used. The mix proportions are tabulated in Table 3.1. Only the K20 and K30 concretes were used in the experimental program.

Although a 200 mm x 200 mm x 50 mm specimen was planned, consideration of final platen dimensions and the difficulty of aligning with respect to the line of action, a specimen which was not the same size as the platen, led to the selection of a 203 mm x 203 mm x 58 mm specimen. An additional 1.5 mm on each side was required to prevent direct interaction of orthogonal platen sets. The as cast dimensions

TABLE 3.1

MIX PROPORTIONS FOR

ONE CUBIC METRE OF CONCRETE

Designation	Cement (kg)	Water (kg)	Gravel (kg)	Sand (kg)
K20	235	200	880	985
K30	285	200	880	935
K40	365	200	880	855

of the specimens varied according to the technique being used for preparing the loading surface. The specimens were eventually cast in a mould with nominal internal dimensions of 207 mm x 207 mm x 59 mm deep (Figure 3.1).

The technique originally planned for preparation of loading surfaces was to run the specimen through a set of parallel diamond saws. This approach, however, was unsuccessful due to technical problems with the apparatus. Another arrangement, whereby the specimen was cut one side at a time with a diamond saw set in a milling machine was also unsuccessful. It was finally decided to lap the specimen on a lapping wheel using a relatively simple jig to keep the specimen perpendicular to the plane of the wheel. The jig was precision machined so that opposing sides of the specimen could be lapped parallel to each other and perpendicular to adjacent sides. The top and bottom surfaces of the specimen were also lapped (without the jig) to remove surface laitance. Figures

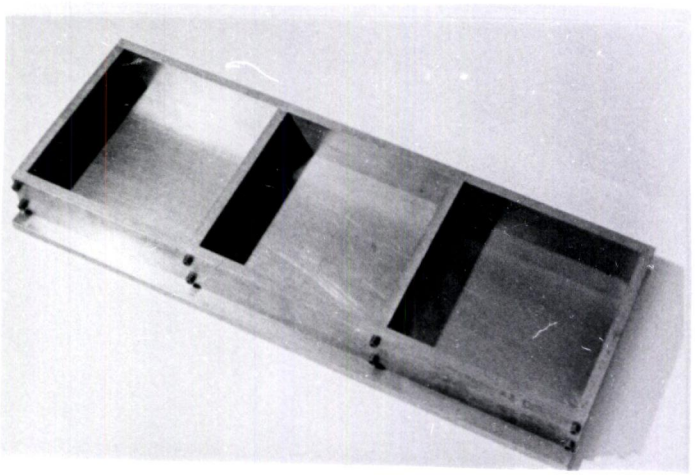

FIGURE 3.1 SPECIMEN GANG MOULD

3.2a and 3.2b show the lapping wheel and jig, with a specimen clamped in position and ready for lapping, and an as cast and prepared specimen are compared in Figure 3.3.

The lapping process can be completed in approximately 20 minutes and, with practice, an accuracy of about .2 mm in 200 mm can be achieved with respect to flatness, parallellism and perpendicularity. The specimens were usually lapped seven days after casting and were then wrapped in plastic and stored under high humidity until required for testing.

3.3 Series I Tests

A series of 13 uni-axial tests were performed, 11 uni-axial compression tests with Frame 1 and 2 uni-axial tension tests with Frame 2. The tests were carried out, primarily, to check the operation of the hydraulic system and associated electronic measurement and control devices. As a result of these tests, the following deficiencies were noted and the necessary corrective measures were taken:

(1) The platens for Frame 1 were severely misaligned, as indicated by load-deformation curves having an extended zone of positive curvature, and by unsymmetric fracture patterns, showing a zone of crushing close to one side or the other of the specimen close to the reacting platen. Since no tests ran to completion on Frame 2 (point 3, below), it was assumed that these platens were also misaligned. An extensive set of measurements

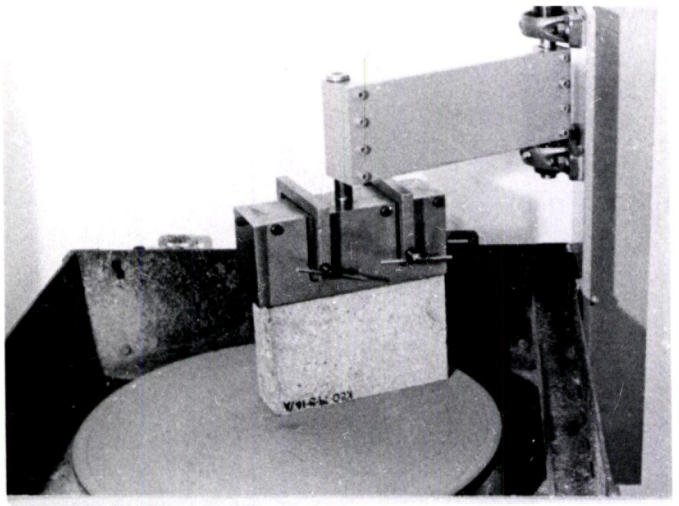

(a)

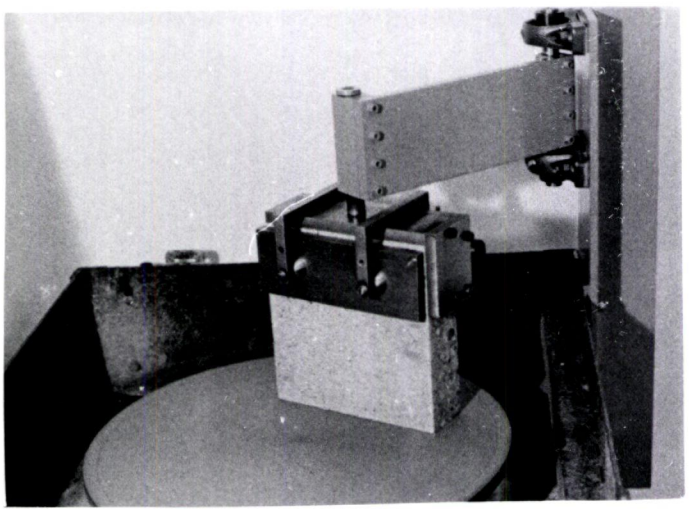

(b)

FIGURE 3.2
LAPPING WHEEL AND JIG WITH SPECIMEN IN PLACE

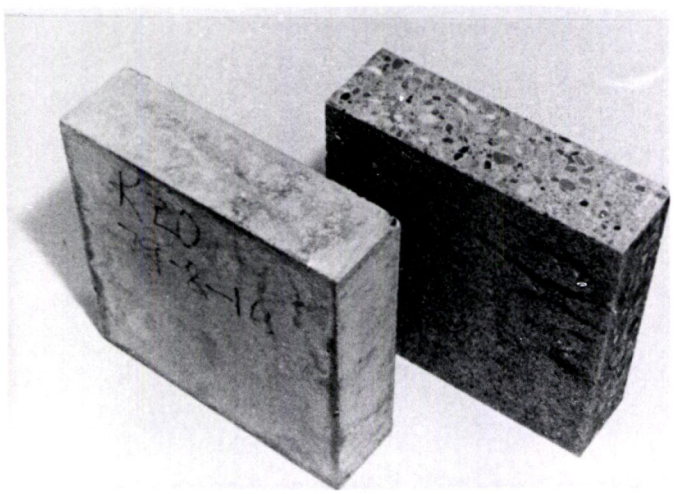

FIGURE 3.3 COMPARISON BETWEEN AN AS CAST AND A PREPARED (LAPPED) SPECIMEN

were carried out and shims were designed to bring the platens into line (Section 3.4).

(2) The use of parallel diamond saws for prearing the specimen loading surfaces was unsatisfactory as it did not result in flat surfaces. The alternate method of using a single saw, set up in a milling machine was also unsatisfactory for the same reason. The problem appeared to be related to the size of saw blade being used (200 mm) and the speed at which it was being turned. Lapping of the specimens was attempted and was an acceptable solution (Section 3.2).

(3) Of the two tests attempted on Frame 2, neither was completed because of rupture of the bond between the platens and the specimen. Two problems were readily apparent. Firstly, the actuator was unable to maintain a steady position and was subject to sudden, relatively large movements for no apparent reason. A faulty servo-valve was replaced and the feed back signal gain was lowered. The problem, however, was not resolved satisfactorily, although the severity of the movements was greatly reduced. Subsequent cleaning of the electrical contacts and the servo-valve diminished the problem to some extent. In addition to mechanical problems, it was also discovered that the epoxy being used (Colma-Dur) was deficient. This was replaced with Carter-Waters 202 -

Type II. However, it did not work satisfactorily because of its low viscosity. Colma-Dur was used for all Series II tests (Section 3.5).

In addition to the above problems, numerous difficulties were also encountered with the electronic control and measurement systems. The problems were eliminated to a large extent by the adoption of a firm set of procedures for carrying out tests and by the addition of swivels to the LVDT mounts (Figure 2.14c).

3.4 Platen Alignment: Measurement and Modifications

Two types of measurements were required. First, the distance from the platen base (used as a plane of reference) to the loading surface was measured at six target points on the surface. From these measurements it was found that all 8 loading surfaces were flat to within .026 mm. However, the loading surfaces were all skewed with respect to the plane of reference, the maximum deviation being .085 mm for platen set III. Each platen set was subsequently mounted on its respective testing machine and all connections were torqued down. The piston was moved back and forth to simulate the conditions during setup. Three measurements of the clear span between the platen loading surfaces were then taken at the six pre-selected targets. The process was repeated 5 times, 3 times with the hydraulics turned on and twice turned off, and the platens were removed and remounted between each set of measurements. Based on these measurements, and assuming that the piston (loading) platen represented a plane of reference perpendicular to the line of action, the reacting platen loading surface deviation, with respect to the plane of

reference, was calculated. A graphical representation is shown in Figure 3.4.

The rotation of the reacting loading surface with respect to the line of action, which was assumed to coincide with the centre of the load cell mounting hole in the crosshead, was calculated. Steel shims were then designed to fit between the load cell and the crosshead such that the platen assembly would be rotated to coincide with the line of action. To ensure no further deviations, both ends of the load cell assembly for each frame were measured and were found to be parallel within .03 mm. Counter-shims were also fabricated to fit between the crosshead and the tightening nut. Figure 3.5 gives the dimensions and tolerances for the shims. A set of shims was not constructed for each individual platen set since a shim designed on the basis of average deviations would, and did, bring all platens back onto the load line to within .1 mm maximum deviation from parallel load surfaces.

As a consequence of rotating the reacting platen assembly, the opposing platens were translated relative to each other. To correct this, the Frame 1 actuator was removed and the mounting plate was redrilled to allow an additional 6 mm of movement vertically. Translation of the Frame 2 platens amounted to only 2 mm, so no action was taken. After remounting of the actuator, all measurements were repeated two times to check that the alignment was still within .1 mm. Removing and remounting of the platens did not substantially affect the measurements.

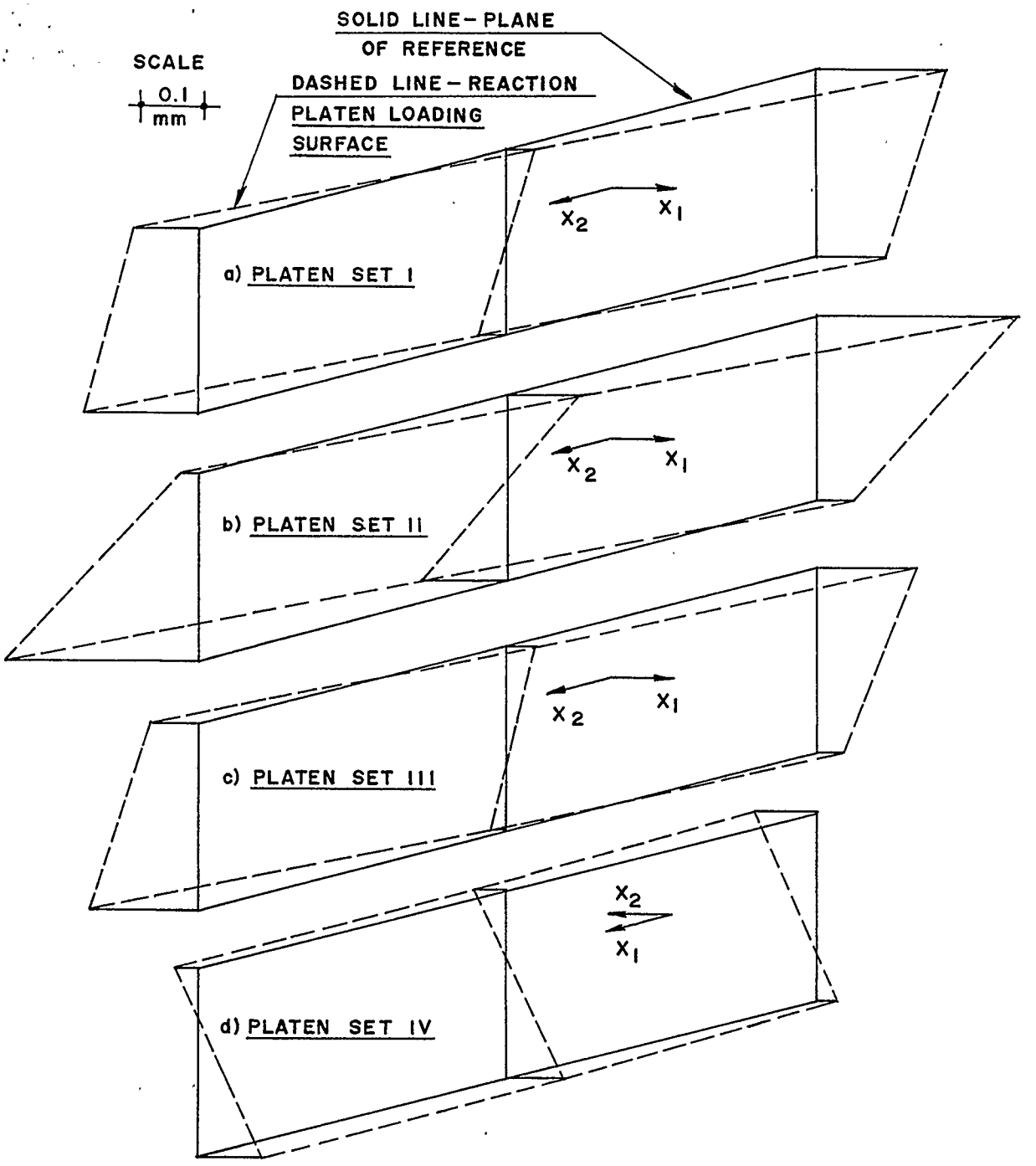

FIGURE 3.4 REACTING PLATEN LOADING SURFACE WITH RESPECT TO THE PLANE OF REFERENCE FOR 4 PLATEN SETS

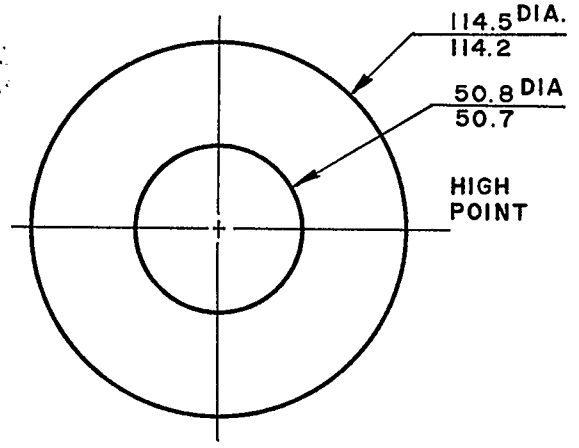

FRAME	$\triangle_D$ (mm)	$\circlearrowleft$ (DEGREES)
1	$\frac{.359}{.335}$*	$\frac{.180}{.168}$
2	$\frac{.280}{.255}$	$\frac{.140}{.128}$

*UPPER LIMIT / LOWER LIMIT

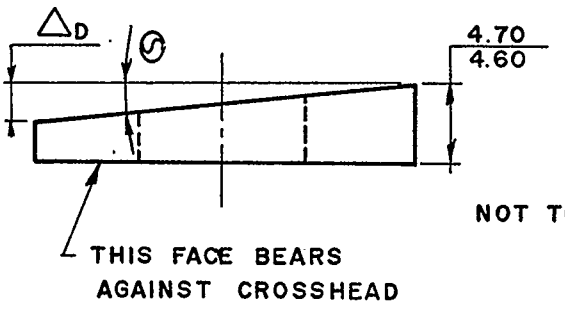

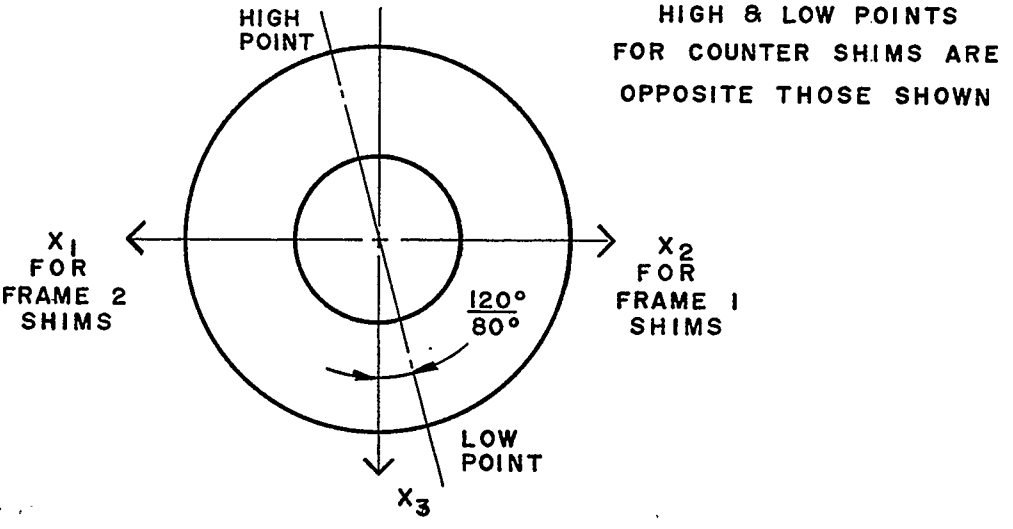

FIGURE 3.5 ALIGNMENT SHIM DIMENSIONS

3.5 Epoxies for Tension and Compression Tests

After an extensive review of the literature on available bonding agents, Colma-Cur by Sika Chemicals was selected because of its excellent strength gain and bonding characteristics. The literature supplied quotes tensile strengths of approximately 28 MPa and an estimated elastic modulus greater than 2000 MPa (calculated) at one day under room temperature curing. The initial results were disappointing, however, for the reasons previously outlined (Section 3.2). Carter Waters 202 Type II epoxy was also tried with little success. After consultation with the manufacturer, the correct mix proportions for Colma-Dur epoxy were obtained and a series of $\frac{1}{3}$-point flexural tests was carried out on small prisms (50 mm x 58 mm x 200 mm) which were sawn in half and epoxied back together. Similar tests were also carried out on prisms consisting of steel and concrete pieces, similar in size to the above, bonded together in the middle third. In both cases, the failure was by rupture of the concrete and not by breaking of the bond.

Colma-Dur was also selected for use as an interface between the platen and specimen loading surfaces for compression tests, since it was realized that near perfect contact between loading surfaces was impossible. A simple analysis will show that a .1 mm layer of epoxy at both ends of the specimen, having a modulus of 2000 MPa, will add less than 2 percent to the overall measured deformations. This was considered to be within reasonable experimental error.

The procedures and techniques for the mixing and application of the epoxy are not outlined herein, nor is the method of cleaning the

hardened epoxy from the platens. Since it requires about one day to clean the platens and prepare them for another test, it was decided that the platens should not be bonded to the glue for compressive loading. To facilitate this, and yet have the interface formed to the loading surfaces of the platen and specimen with a minimum thickness of epoxy, a .025 mm polyethylene "bond breaker" was used between the platen and the interface. The bond breaker was left in place during the test as it will have no appreciable effect on the deformations and because it cannot be easily removed without a resultant mis-alignment of the platen with respect to the newly formed interface.

The results of the Series II tests verify the effectiveness of the interfacial layer of epoxy.

3.6 Series II Tests

A total of 39 tests was carried out in this series, 30 uni-axial compression tests using Frame 1, 8 uni-axial tension tests using Frame 2 and 1 bi-axial test in which a compressive deformation was applied at a constant rate with Frame 1 and zero deformation was maintained with Frame 2. The testing program was again plagued with numerous technical and procedural problems, resulting in only six conclusive tests; 3 compression tests, 2 tension tests and the sole bi-axial test.

3.6.1 Uni-axial Compression Tests

All tests were conducted with a compressive rate of deformation, as measured between platen loading surfaces, which was equivalent to a specimen strain rate of approximately 10×10^{-6} per second. The tests ran to completion in all except two cases, and loading was continued

until a maximum recorded strain of between 5 x 10^{-3} and 10 x 10^{-3} was reached in the specimen. Ten of the specimens were mounted with strain gauges on both the top and bottom surfaces, oriented in both the direction of the load and transversely.

All of the 25 tests which were considered unsatisfactory were rejected because of indications of misalignment of the specimen with respect to the platen loading surfaces. The problem was manifested in unsymmetric strain gauge readings, an extended zone of positive curvature in the stress-strain relationship and by crushing on one side of the specimen only. In 15 of these tests, an epoxy interface was used on both loading surfaces.

The principal problem appeared to be that after the interface had set, small adjustments to the position of the actuator piston would result in slight rotation of the platen relative to the interface. To form the epoxy interface, the specimen is aligned between the platens, the epoxy (close to initial set) and bond breaker are applied and then the loading actuator is brought to bear against it. A small pressure is maintained for 15 minutes and then the system is turned off. Subsequent movements of the piston away from the specimen did occur, however, if the hydraulic system was warm when it was shut down. Attempts at re-aligning the platen were futile. The early trials at moving the piston back so that the bond breaker could be removed resulted in similar problems. The solution was to not remove the bond breaker, since it had an insignificant effect on the results, and to maintain hydraulic pressure until the epoxy had fully cured.

Another problem which became apparent during the course of these tests was that the transverse strain measuring device was

susceptible to low frequency vibrations such as those which usually accompany the start of actuator piston movement. As a result, a large initial jump in the transverse strain measurement was recorded. For the purposes of analysis, the raw data were simply adjusted to take account of this fact.

3.6.2 Uni-axial Tension Tests

A tensile rate of strain of 10×10^{-6} per second was used for all tests. Of the 8 tests attempted, only 2 reached completion, and the results of these two were very satisfactory (Section 4.3). Strain gauge measurements were taken on both the top and bottom surfaces in the direction of loading, and on the top surface only, transverse to the direction of loading.

All six of the rejected tests did not reach completion because of rupture of the platen-specimen bond either when the system was turned on, or when the loading had just begun. The problem appeared to be due to the presence of impurities on the concrete and platen loading surfaces. It is suspected that the acetone residue, remaining after the cleaning of both surfaces, was the cause, since the problem did not occur when water was used to clean the specimen and the platen was filed and dry wiped after cleaning in Di-chlormethane in ultrasound.

3.6.3 Bi-axial Test

Only one bi-axial test was performed because of time constraints. The specimen was deformed at a strain rate of 10×10^{-6} per second in the direction of Frame 1 and the orthogonal actuator was programmed to maintain zero deformation in the direction of Frame 2. The actuator was not able to maintain zero deformation throughout the entire test, how-

ever, because the transverse force required to do so exceeded the maximum capacity of the actuator. The strain at which this deviation became significant was beyond the point normally considered as the failure point for concrete (Section 4.4). The specimen was strain gauged top and bottom and in both directions.

3.6.4 Summary

By the time the last tests were performed, the procedures and techniques for preparing specimens and setting up and running tests were well established. This is indicated by the fact that the six conclusive tests were grouped with the last eight specimens tested. The results indicated that, by and large, the use of a high modulus epoxy interface for both compressive and tensile loading resulted in a reasonably uniform state of strain (stress) throughout the specimen. Furthermore, it was shown that the tests were repeatable in the sense that for similar loading conditions, the loads and the three principal strains as measured by the LVDT's were comparable from test to test.

One of the problems which was not satisfactorily resolved at the completion of testing was that the epoxy interface had a tendency towards viscous creep, until it had hardened sufficiently, unless a small (less than .1 MPa) pressure was maintained at the loading surfaces. Although this did not pose serious problems for tension tests, unless there was excessive movement of the piston after turning the hydraulics off, the results of compression tests were greatly affected. It appeared that if the epoxy was not hardened in the correct shape when the system was turned off, it would flow such that when hard, a strain gradient would be induced through the depth of the specimen upon subsequent loading.

The solution, as indicated, was to leave the hydraulics on and to maintain a small load on the specimen until the epoxy had hardened (about 2 hours).

CHAPTER 4

RESULTS

4.1 General

The direct objective of the experimental portion of the verification program was to show that the testing machine and the procedures which were developed would be capable of testing concrete bi-axially, under the conditions and constraints listed in Chapter 1. The most important criterion, vis-a-vis reasonably accurate and representative results, is that the strain (stress) distribution throughout the test specimen should be uniform. To show that this was the case, it first had to be proven that reasonably uniform strains were generated in specimens tested uni-axially in each independent frame. The bulk of the work, 38 out of 39 tests, dealt primarily with this aspect of the verification. Unfortunately, time constraints limited the bi-axial verification to a single test.

As was indicated in the previous chapter, only 6 tests formed the basis of acceptance of the testing machine. The details and results of the tests will be reviewed and conclusions will be drawn with respect to reliability of the individual testing frames and test procedures.

The sign convention used for the representation of the stresses and strains is shown in Figure 4.1. Compressive loads, stresses, deformations and strains are negative and tension is positive.

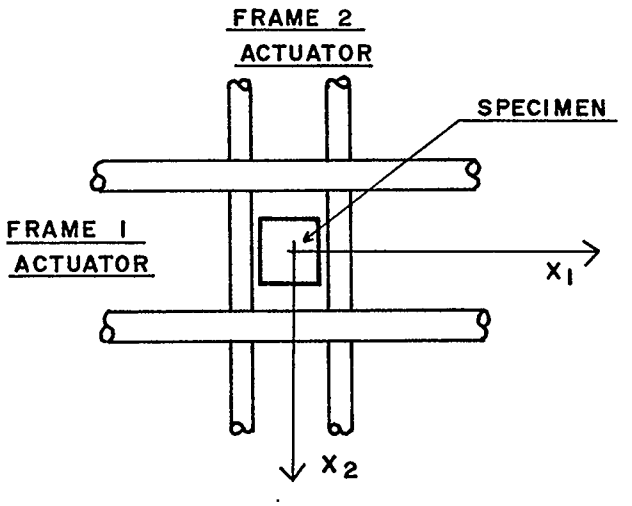

FIGURE 4.1 SIGN CONVENTION

4.2 Frame 1 - Uni-axial Compression Tests

Of the 30 Series II tests undertaken with this frame, only test numbers 32, 33 and 34 proved to be conclusive. All three specimens were from the same batch of "K20" concrete which had a cylinder strength and splitting tensile strength of 22.4 MPa and 3.82 MPa, respectively, at 75 days. The 3 tests were carried out over a period of 5 days so that no increase in the average concrete strength was expected.

The specimens were lapped and measured one week after casting, and were measured again previous to each test. The average dimensions of each specimen were calculated from six Vernier caliper readings taken at target points on the periphery of the loading surfaces and four readings across the thickness of the specimen. The squareness of the specimen was determined from comparisons to a precision set

square. The average dimensions, range of readings and deviation from a square for each test specimen are given in Table 4.1.

TABLE 4.1

SPECIMEN DIMENSIONS FOR UNI-AXIAL COMPRESSION TESTS

Test	Direction x_1		Direction x_2		Direction x_3		Maximum Deviation from Square (mm)*
	Length (mm)	Range (mm)	Length (mm)	Range (mm)	Length (mm)	Range (mm)	
32	201.93	.28	202.47	.26	57.54	.58	±1.13
33	202.88	.16	202.82	.14	57.56	.18	±0.10
34	202.63	.26	202.58	.14	57.60	.20	±0.25

*Based on a gauge length of 200 mm.

Prior to mounting and gluing between the loading platens, each specimen was mounted with 30 mm long, uni-axial concrete strain gauges. The grid used is shown in Figure 4.2. All 10 gauges were used except for the first test which did not have gauges 9 and 10 mounted.

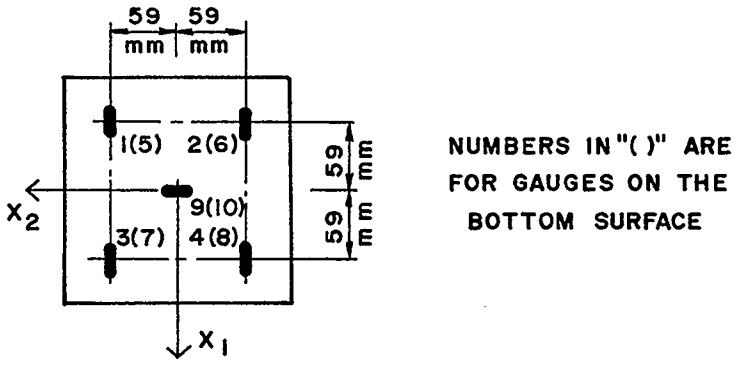

FIGURE 4.2 STRAIN GAUGES FOR UNI-AXIAL COMPRESSION TESTS

After the interface had cured for approximately 20 hours, the LVDT's used to measure deformations in the 3 directions were carefully placed and adjusted. To prevent dehydration during the curing period of the epoxy, the specimen was wrapped in plastic. A preload equivalent to approximately -.5 MPa and a strain rate of -10×10^{-6} per second were used for each test.

The stress-strain curves for all three tests are plotted in Figures 4.3a to 4.3c. These curves are derived from the deformations as measured by the three LVDT's. The average dimensions of the specimen were used for the gauge lengths. Figure 4.4a compares the measured σ_1-ε_1 and the calculated σ_1-volumetric strain ($\varepsilon_v = \varepsilon_1 + \varepsilon_2 + \varepsilon_3$) relationships for the three tests. Figure 4.4b compares the measured σ_1-ε_2 and σ_1-ε_3 curves. All three tests are comparable, having an average peak stress of -28.1 MPa with a coefficient of variation of 1.3% and an average axial strain at peak stress of -2.1×10^{-3} with a coefficient of variation of 3.0%. The curves are almost identical for stresses up to 85 percent of the peak stress. Table 4.2 summarizes some of the properties of the axial stress-strain (σ_1 vs. ε_1) curves.

4.2.1 Strain Distribution in the Direction of Loading

For all three tests, the strain readings for the 8 gauges in the direction of loading correlated well with ε_1, as measured by LVDT. However, in all cases, the average gauge reading was less than ε_1. The range of individual strain readings for the 3 tests are plotted in Figure 4.5, with respect to ε_1 as measured by LVDT.

A linear regression analysis, with respect to ε_1, was completed for each gauge reading and combinations of gauge readings 1 to 4

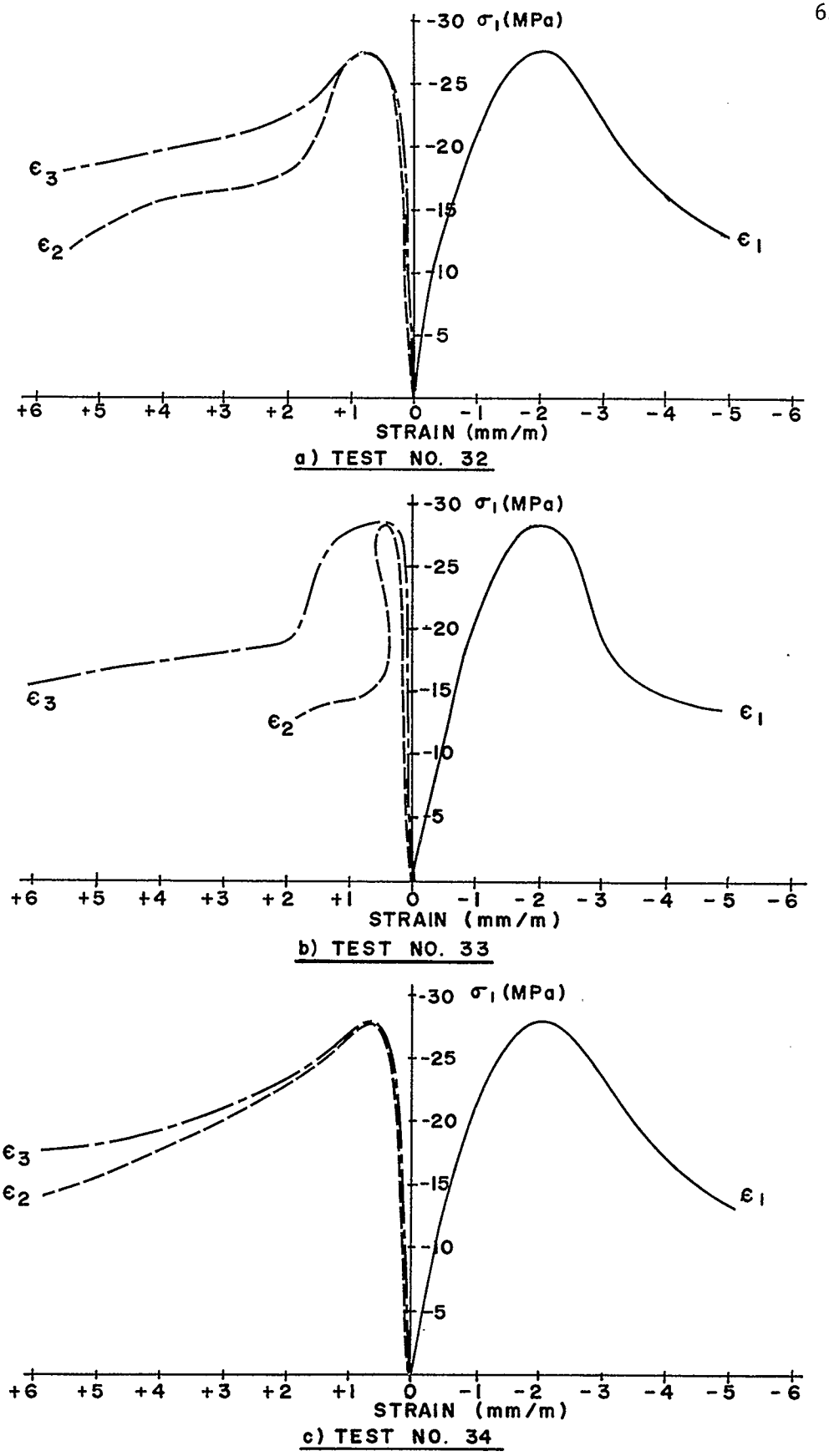

FIGURE 4.3 STRESS-STRAIN CURVES FOR UNI-AXIAL COMPRESSION TESTS

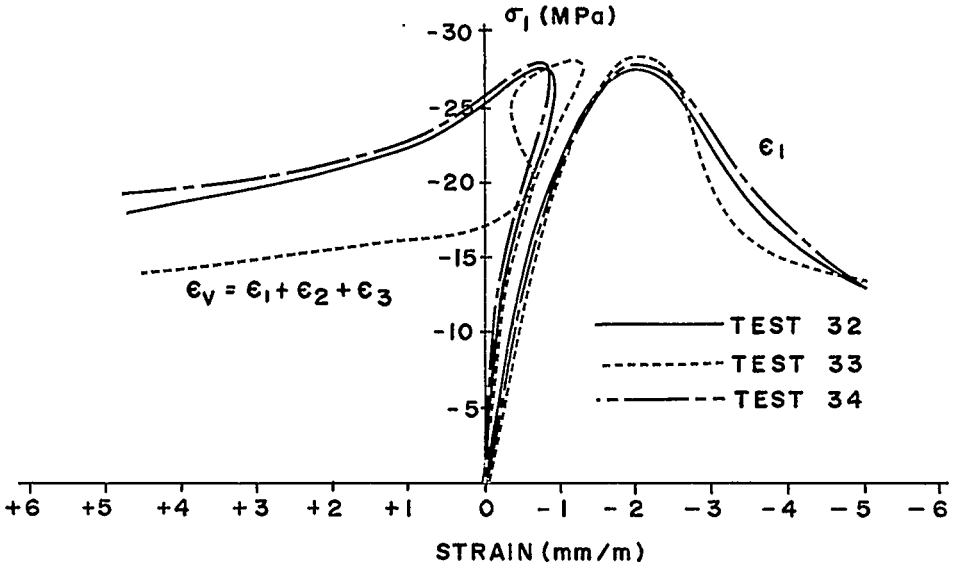

a) AXIAL STRAIN ϵ_1 AND VOLUMETRIC STRAIN ϵ_v

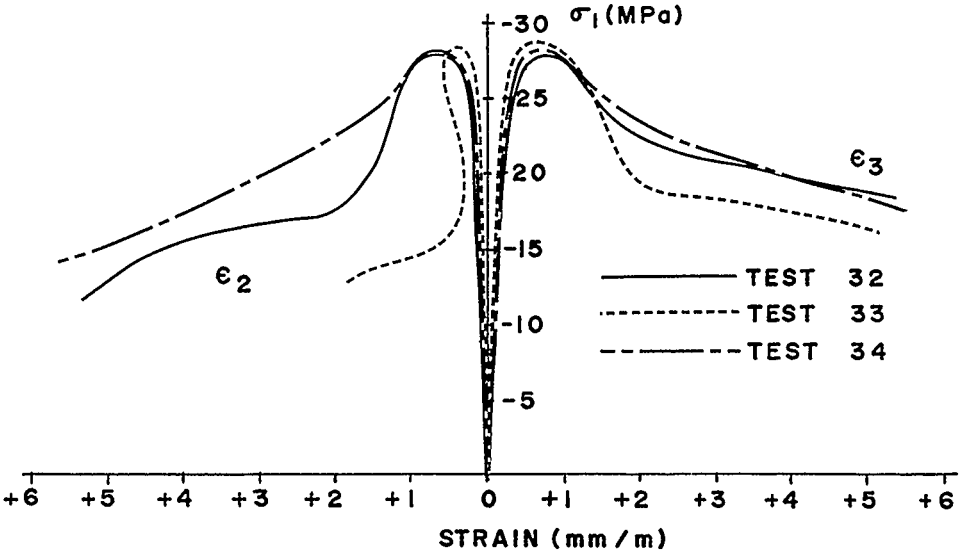

b) LATERAL STRAIN ϵ_2 AND ϵ_3

FIGURE 4.4 COMPARISON OF STRESS-STRAIN CURVES FOR UNI-AXIAL COMPRESSION TESTS

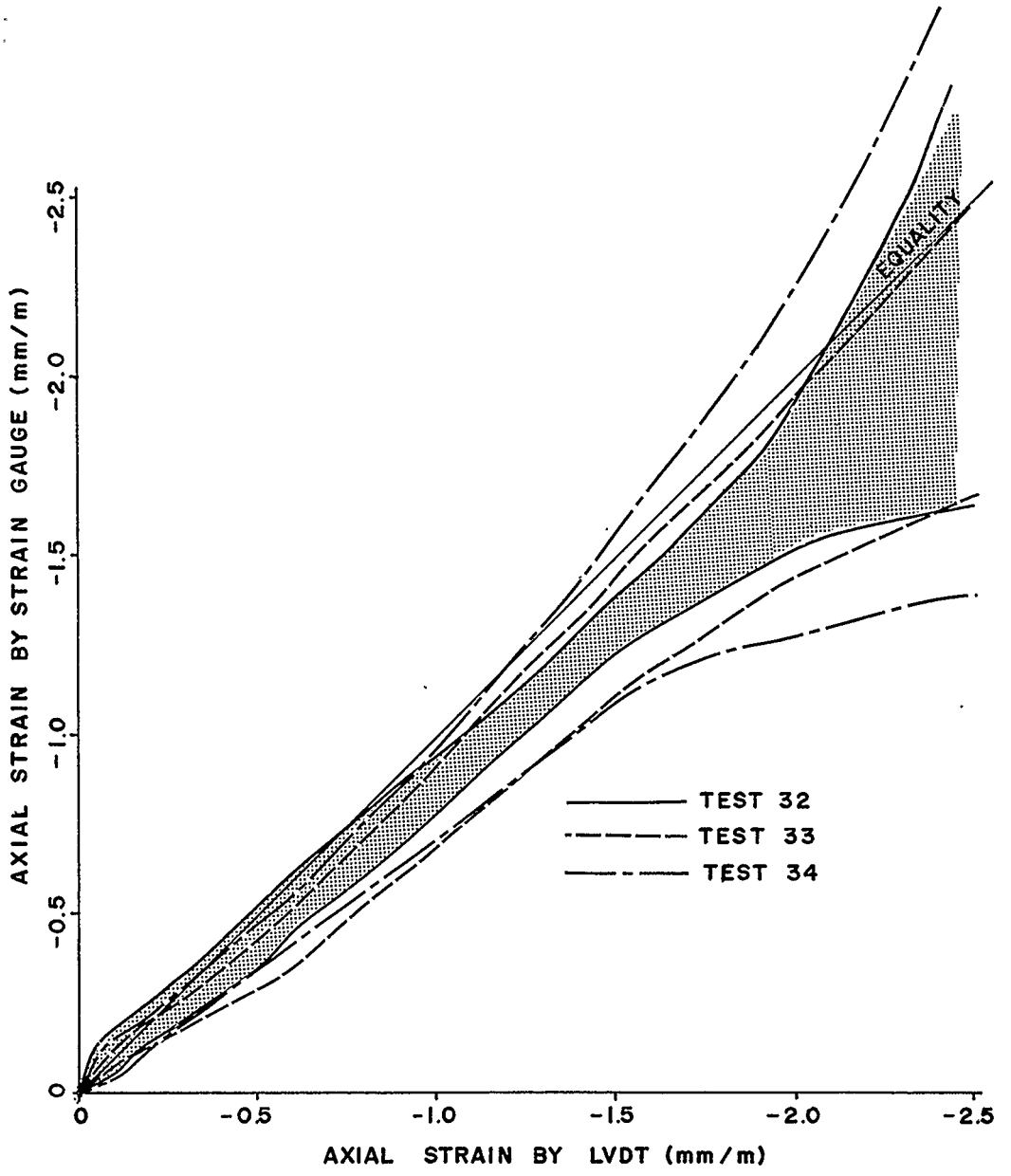

FIGURE 4.5 RANGE OF AXIAL STRAIN GAUGE READINGS
FOR UNI-AXIAL COMPRESSION TESTS

TABLE 4.2

COMPARISON OF PROPERTIES OF σ_1-ε_1 CURVES FOR UNI-AXIAL COMPRESSION TESTS

Test No.	Peak Stress (MPa)	Strain at Peak Stress (mm/m)	Modulus at Peak Stress (MPa)	Initial Tangent Modulus (MPa)	Secant Modulus at 50% of Peak Stress (MPa)
32	-27.6	-2.1	13,300	28,600	25,600
33	-28.3	-2.1	13,600	24,300	22,800
34	-28.3	-2.2	13,600	27,600	23,600
Mean	-28.1	-2.1	13,500	26,800	24,000
Coef. of Var.	1.3%	3.0%	1.3%	8.4%	6.0%

(top 4 gauges), gauges 5 to 8 (bottom 4 gauges) and gauges 1 to 8. The correlation constants and coefficients of determination (r^2) are presented in Table 4.3.

When the individual strain readings were compared to each other, it was found that the strain difference was less than $|50 \times 10^{-6}|$ at the 5% level of significance. Tests on the reliability of the computerized data acquisition system, used to measure and record the strain readings, showed that the strains could not be measured to an accuracy better than $|40 \times 10^{-6}|$. Previous research (Binns and Mygind, 1949, and Cooke and Seddon, 1956) has also indicated that for ratios of strain gauge length to maximum aggregate size of 2.4 (i.e., 30/12.5 = 2.4), individual strain readings will vary by as much as 10% of the average reading. Therefore, the strain readings may be considered to be (statistically) equivalent.

TABLE 4.3

CORRELATION BETWEEN STRAIN GAUGES AND ε_1,

AS MEASURED BY LVDT FOR UNI-AXIAL COMPRESSION TESTS

Test No.	Correlation Constant+ for Gauge Numbers										
	1	2	3	4	5	6	7	8	1 to 4	5 to 8	1 to 8
32	0.88(100)*	0.82(100)	0.83(100)	0.86(99)	0.91(100)	0.91(100)	0.88(100)	0.94(100)	0.84(100)	0.95(100)	0.89(100)
33	1.00(100)	0.81(99)	0.85(99)	0.97(99)	0.69(100)	0.70(98)	0.80(99)	1.04(100)	0.91(98)	0.81(92)	0.86(94)
34	0.99(100)	0.56(96)	0.79(99)	1.23(99)	0.77(100)	0.76(100)	0.73(99)	0.88(100)	0.89(85)	0.78(98)	0.84(89)

+The correlation constant was determined by standard Linear Regression Analysis. The constant is a measure of the relationship between the strain, as measured by the strain gauge(s), and the strain as determined from LVDT measurements.

*The numbers in brackets represent the coefficient of determination (r^2) of the correlation constant, in percent. The coefficient is a measure of the accuracy of the assumed linear relationship. The indicated values have been rounded to the nearest 1%.

The relationship between the average strain reading and ε_1, at the 5% level of significance, for all 3 tests is shown in Figure 4.6. It can be seen that the measured strains are significantly lower than the overall strain calculated from the LVDT measurements. The strain differences cannot be accounted for by either excessive deformations at the epoxy interface (a deformation greater than the estimated thickness of the interface would be required) or by non-uniform straining of the specimen. To achieve a larger overall strain than that which occurs in the central zone of the specimen, the end zones would have to be subject to an applied bi-axial compression-tension state of stress, which they are not. There is no reasonable explanation for this behaviour except that, possibly, the strain readings are affected by a combination of gauge length, maximum aggregate size, modular ratio between the aggregate and the mortar, volume of aggregate and the shape of the specimen.

4.2.2 Strain Distribution Transverse to the Direction of Loading

Only two of the specimens were gauged transversely and, for these, only 2 gauges were used. It was found from previous tests, not recorded here, that transverse readings were not very accurate primarily because of the low magnitude of the strains in this direction. Accuracy is further impaired by the relatively low gauge sensitivity and the variability in strain resulting from the heterogeneity of the concrete.

4.2.3 Specimen Fracture

In all three cases, failure was by the formation of a single crack at an acute angle (between 20° and 50°) to the direction of loading. The failed specimens are shown in Figures 4.7a to 4.7c. The

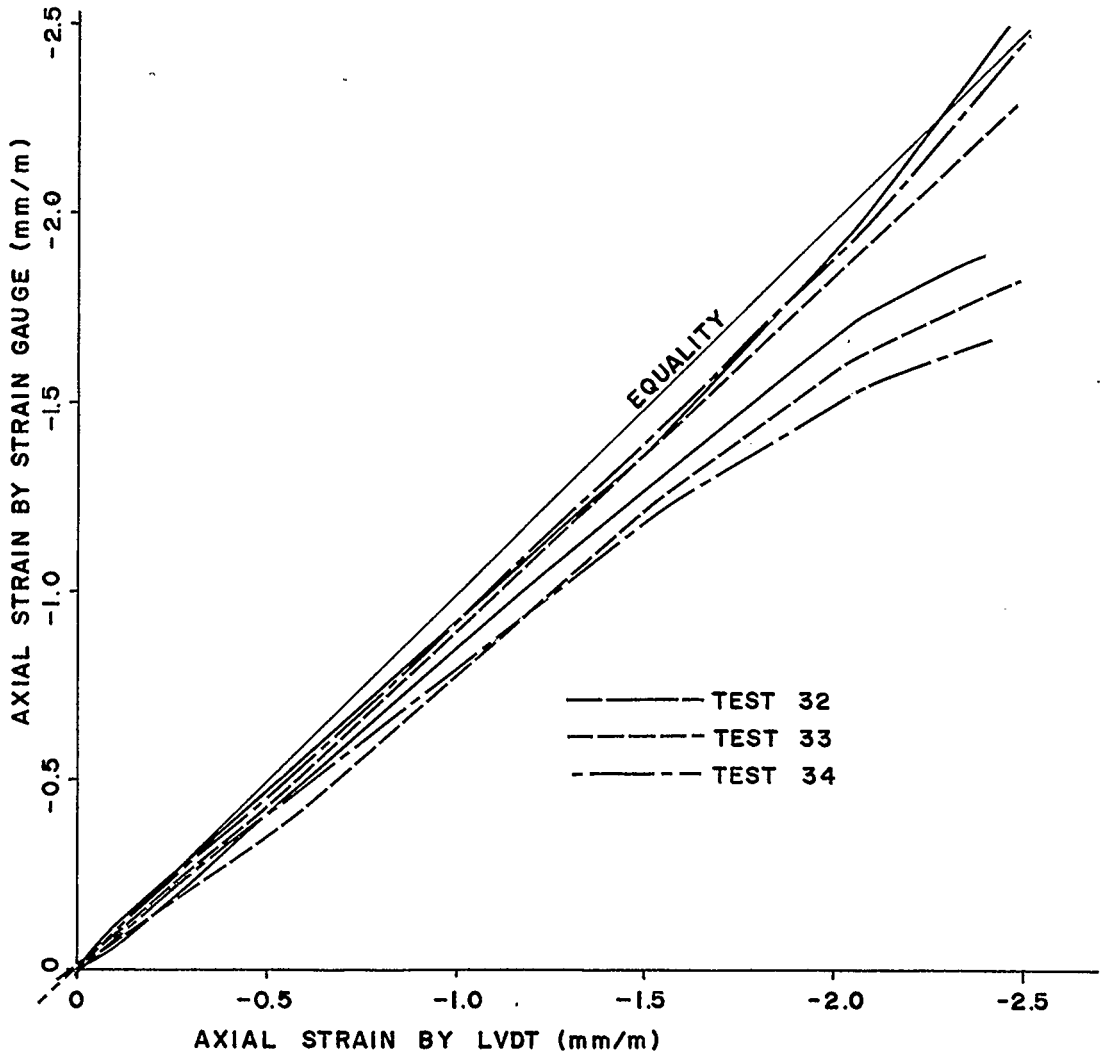

FIGURE 4.6 90% CONFIDENCE LIMITS ON AVERAGE STRAIN GAUGE READING FOR UNI-AXIAL COMPRESSION TESTS

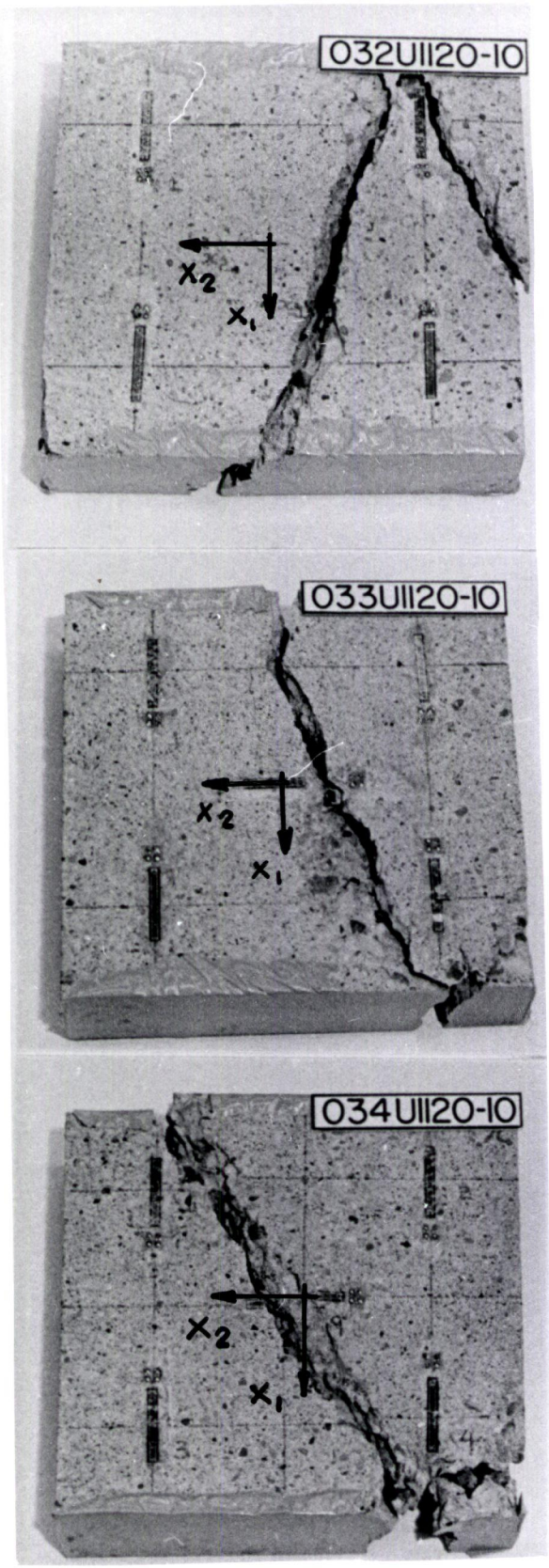

(a) Test 032

(b) Test 033

(c) Test 034

FIGURE 4.7 FRACTURE PATTERNS FOR UNI-AXIAL COMPRESSION TEST SPECIMENS

system used for specimen identification is explained in Appendix A, Figure A.1. These results are consistent with those of other investigators which have used similar equipment (Kupfer, 1969, in particular). The differences occur in that failure could not be easily defined in terms of stresses and strains in this case. Although these tests were terminated when ε_1 reached -5.0×10^{-3}, previous tests were continued to strain levels exceeding -12.0×10^{-3} and the specimen was still capable of carrying some load.

4.3 Frame 2: Uni-axial Tension

Only two of the eight uni-axial tension tests attempted in Series II were completed; test numbers 36 and 38. The specimens for these tests were taken from two different batches of "K30" concrete, and were tested at concrete ages exceeding 7 months. The cylinder and splitting tensile strengths were, respectively, 43.9 MPa and 5.78 MPa for test No. 36 and, 48.9 MPa and 5.81 MPa for test No. 38. The use of two different batches was necessitated by the lack of overstrength specimens, preferred for tension tests, at the time of testing.

The preparation of the specimens and the determination of the linear and angular dimensions was as described for uni-axial compression tests. The specimen dimensions are given in Table 4.4.

The larger ranges of the caliper readings, compared to test specimens for the compression tests, is primarily due to the fact that these specimens represent some of the early attempts at lapping of the loading surfaces.

TABLE 4.4

SPECIMEN DIMENSIONS FOR UNI-AXIAL TENSION TESTS

No.	Direction x_1		Direction x_2		Direction x_3		Maximum Deviation from Square* (mm)
	Length (mm)	Range (mm)	Length (mm)	Range (mm)	Length (mm)	Range (mm)	
36	203.14	.29	203.30	.28	58.20	.38	±.18
38	203.61	.38	203.43	.30	57.84	1.00	±.32

*Based on a gauge length of 185 mm.

Before testing, each specimen was mounted with 30 mm long, uni-axial concrete strain gauges. The grid used is shown in Figure 4.8. Only 4 gauges were used to measure strains in the direction of loading, at the centreline of the specimen, because of a shortage of gauges and because of apprehension concerning the outcome of the test (i.e., would the test run to completion). An 8 gauge grid similar to Figure 4.2 had been used for previous tests.

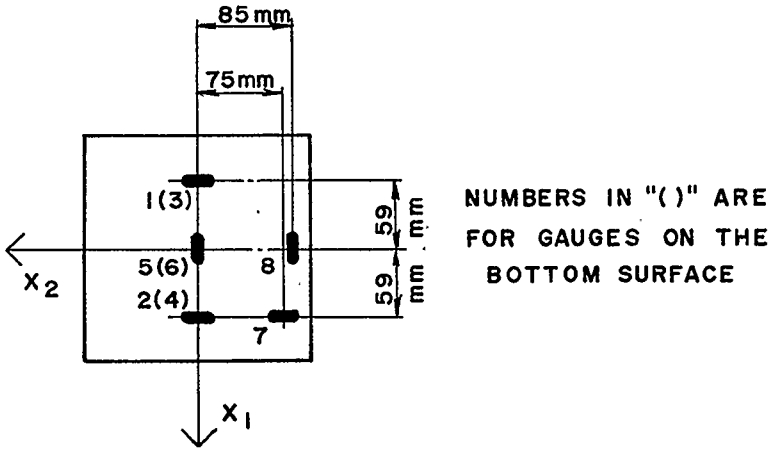

FIGURE 4.8 STRAIN GAUGES FOR UNI-AXIAL TENSION TESTS

Gauges 7 and 8 on the top surface of the specimen were added as an afterthought when extra gauges were available. For test No. 36, gauge 6 became inoperative prior to starting the test.

The procedures for mounting the specimen between loading platens and for setting of the interface were similar to those used for the tests on Frame 1, except that the epoxy was bonded to both the specimen and the loading platens. To prevent the epoxy from running between the individual rods of the platen, the ends of the platen were packed with silicone sealant. A good bonding surface was obtained on the platen by hand filing and dry wiping the surface after application of the sealant.

Since the presence of shrinkage cracks in the specimen can result in drastically reduced strengths under direct tensile loads, the specimen was wrapped entirely in plastic, except for the loading surfaces, and the plastic was sealed around the edges with silicone sealant. The epoxy was allowed to cure for 24 hours prior to setting up the LVDT's and the start of the test. A preload equivalent to approximately +.2 MPa and a strain rate of $+10 \times 10^{-6}$ per second were used for each test.

The stress-strain curves for each test are shown in Figures 4.9a and 4.9b. The curves were derived from the recorded LVDT measurements, using average specimen dimensions for the gauge lengths. The results from the two tests compare favourably. An unexpected result from test No. 36 was that the principal stress-strain relationship showed a small descending branch.

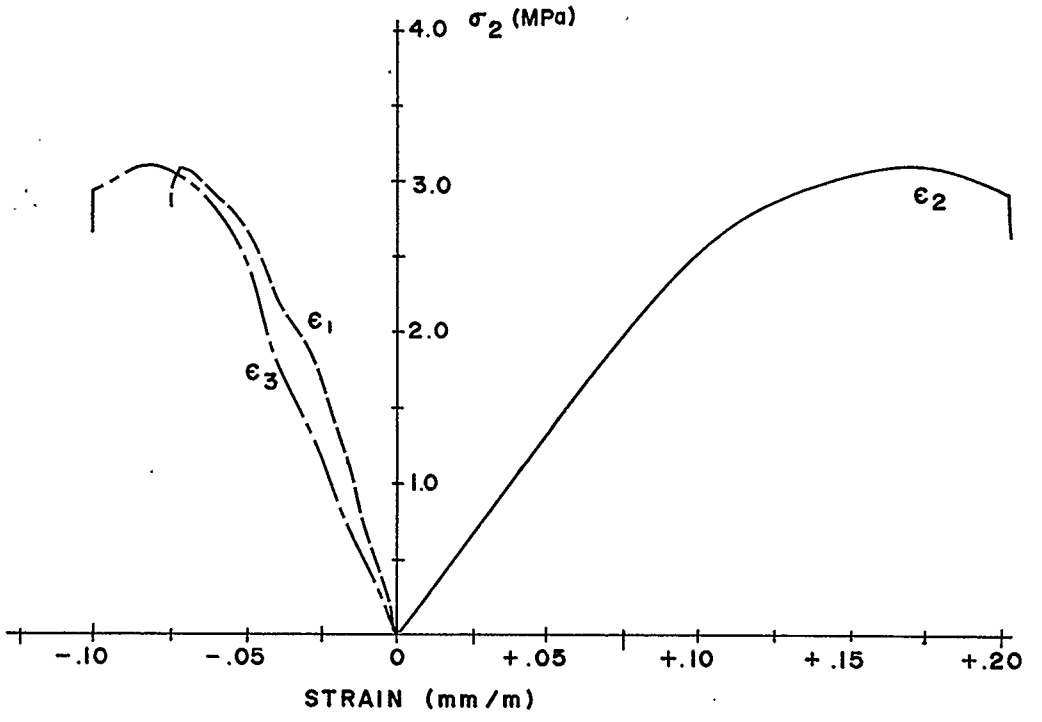

a) TEST NO. 36

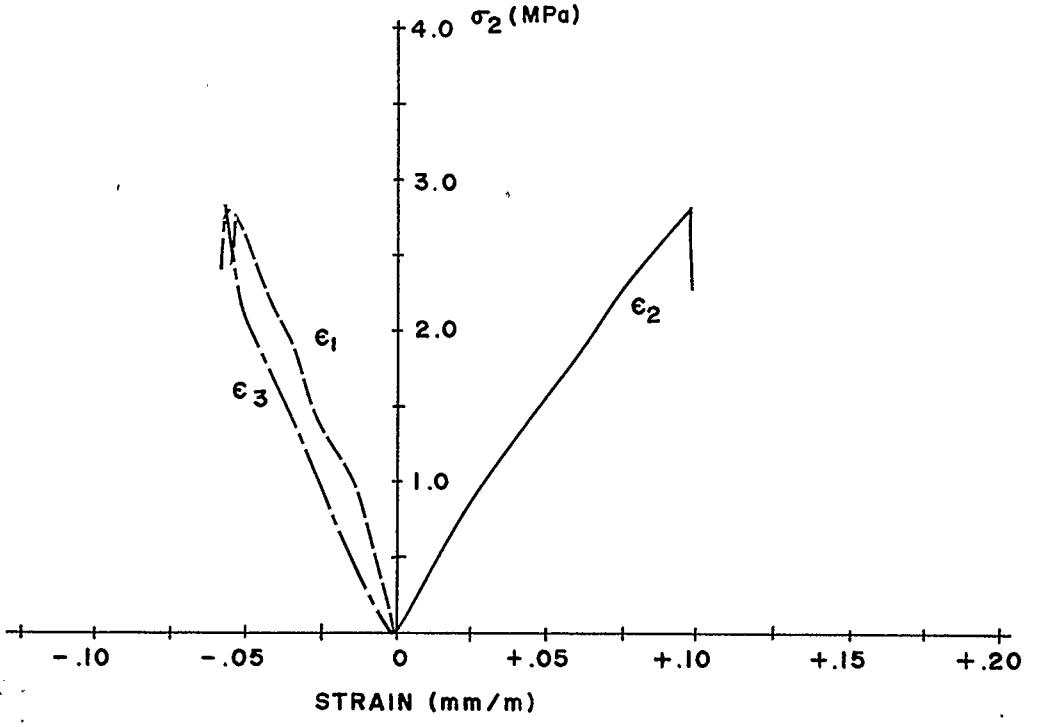

b) TEST NO. 38

FIGURE 4.9 STRESS-STRAIN CURVES FOR UNI-AXIAL TENSION TESTS

As was anticipated the strain gauge results were widely scattered, particularly for transverse strain readings for which the anticipated reading error (40×10^{-6}) was larger than the expected strains. The average of the 4 gauges in the direction of loading (gauges 1 to 4) are plotted versus ε_2, as measured by LVDT, at the 5 percent level of significance (Figure 4.10).

From these results, it can be argued that the average strain at the centre of the specimen is significantly lower than the overall strain measured by the LVDT. As was the case for Frame 1, this difference cannot be effectively accounted for by excessive straining of the interface or of the ends of the specimen, although these have contributed somewhat to the discrepancy.

4.3.1 Specimen Fracture

The fractured specimens for both tests are shown in Figures 4.11a and 4.11b. Test No. 36, which indicated a descending portion of the stress-strain relationship prior to fracture, was exceptional in that the specimen failed by the formation of a single crack, perpendicular to the direction of load, through the centre of the specimen. The fracture plane for test No. 38 occurred very close to the epoxy interface and intersected the interface over approximately 15% of the loaded area. This may still be considered to be a valid test since the fracture was 85% through concrete.

4.4 Bi-axial Test

Only one bi-axial test was undertaken. Test No. 39 was attempted only to check that the system was capable of loading and maintaining deformation control in two directions simultaneously. Generation of a

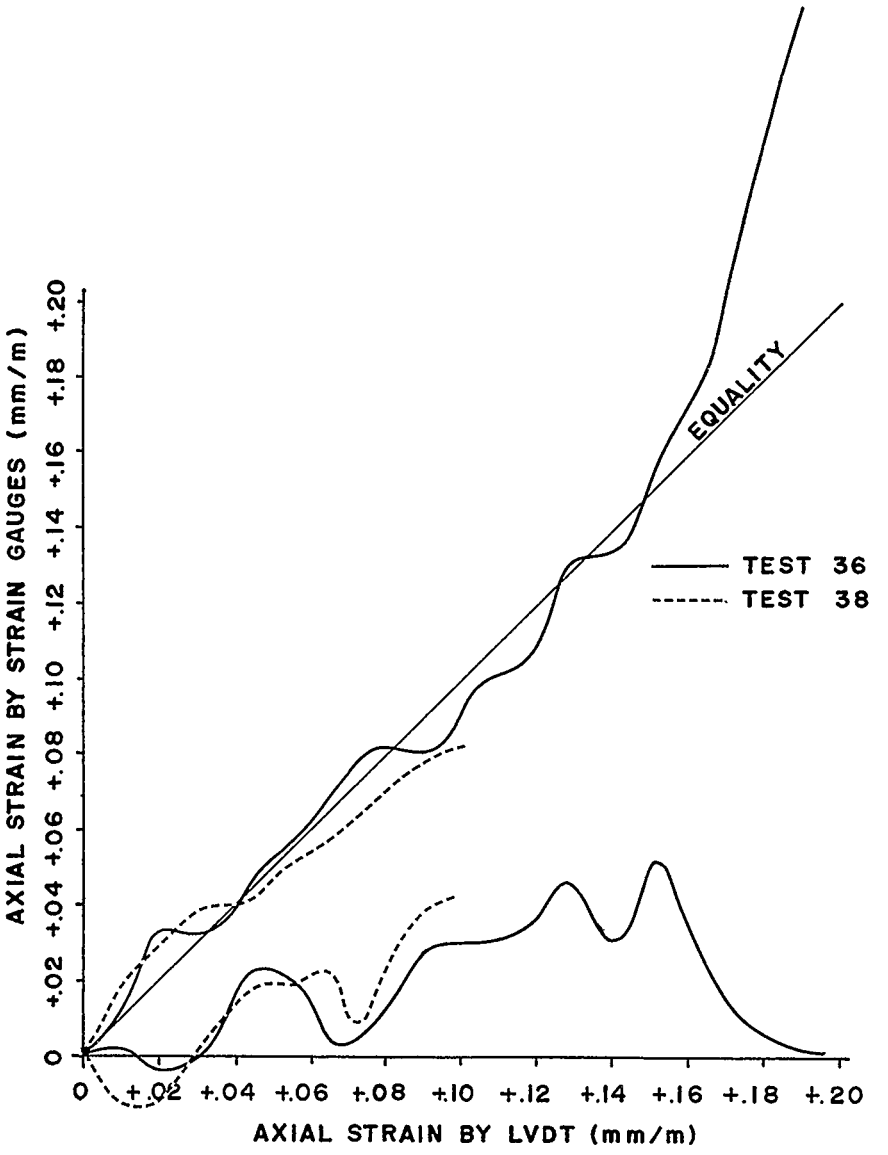

FIGURE 4.10 90% CONFIDENCE LIMITS ON AVERAGE STRAIN GAUGE READINGS FOR UNI-AXIAL TENSION TESTS

(a) Test 036

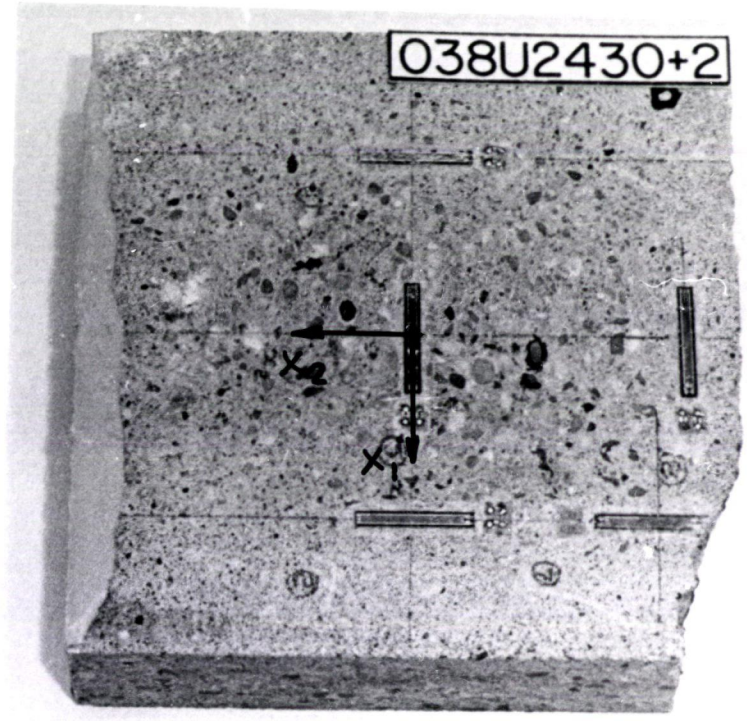

(b) Test 038

FIGURE 4.11 FRACTURE PATTERNS FOR UNI-AXIAL TENSION TESTS

uniform state of bi-axial strain (stress) and repeatability of the results was not considered to be a problem primarily because of the method of testing, which was proven to be effective for uni-axial tests.

The bi-axial stress state selected for investigation was compression-compression, achieved by loading at a uni-axial rate of strain of -10×10^{-6} per second in one direction and by maintaining zero deformation in the other direction. This loading regime was chosen because it could be achieved without any modification to the existing electronic controls.

The specimen used was made from K20 concrete having a cylinder and splitting tensile strength of 20.6 MPa and 3.95 MPa, respectively, at an age of 116 days. The measured cylinder strength was only 75% of the anticipated strength. Although no irregularities were noted at the time, it is believed that faulty capping may have been the cause. The preparation of the specimen proceeded as before. The linear and angular dimensions are given in Table 4.5.

TABLE 4.5

SPECIMEN DIMENSIONS FOR BI-AXIAL TEST

Test No.	Direction x_1		Direction x_2		Direction x_3		Maximum Deviation from Square* (mm)
	Length (mm)	Range (mm)	Length (mm)	Range (mm)	Length (mm)	Range (mm)	
39	202.46	.28	202.90	.20	58.57	.52	±20

*Based on a guage length of 200 mm.

The specimen was mounted with 8 uni-axial, concrete strain gauges, 4 gauges in each direction (Figure 4.12). The mounting of the specimen was carried out in a similar manner as for the uni-axial

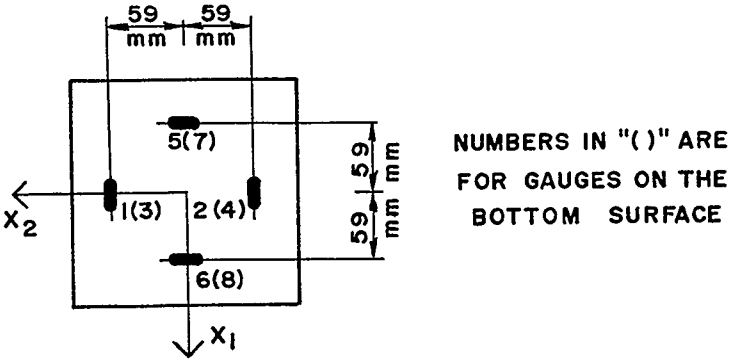

FIGURE 4.12 STRAIN GAUGES FOR BI-AXIAL TEST

compression tests except that two directions were involved. The only extra precaution which was required was that when the four interfaces were formed, the two frames had to be positioned such that the specimen remained concentric with respect to both platen sets. For the test, a preload equivalent to -.5 MPa was used in both directions.

The test proceeded until a strain of -10.0×10^{-3} was reached in the primary direction (x_1). The specimen, at this point, was still maintaining a load of approximately 18 percent of the peak load. The stress-strain curves are shown in Figure 4.13.

The relationship between the two applied strains and the two measured stresses are shown in Figures 4.14a and 4.14b, respectively. The movement, in the tension direction, of the Frame "2" piston away from zero strain was due to the generated transverse stresses exceeding

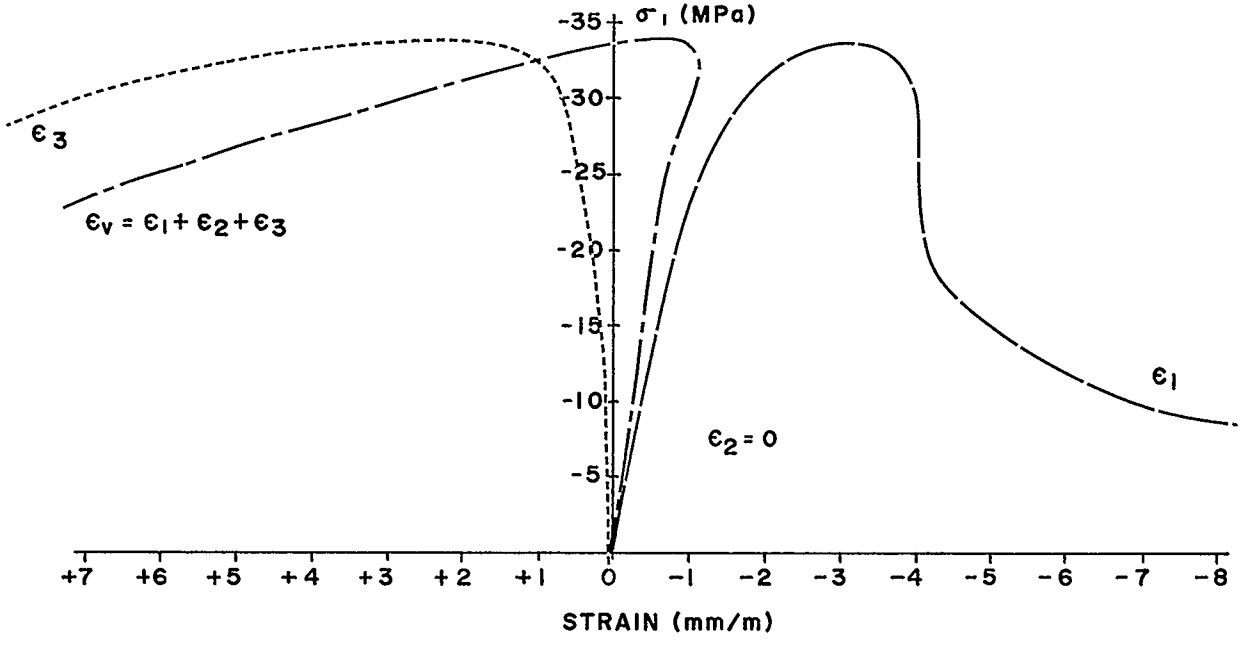

FIGURE 4.13 STRESS-STRAIN CURVES FOR BI-AXIAL TEST (NO. 39)

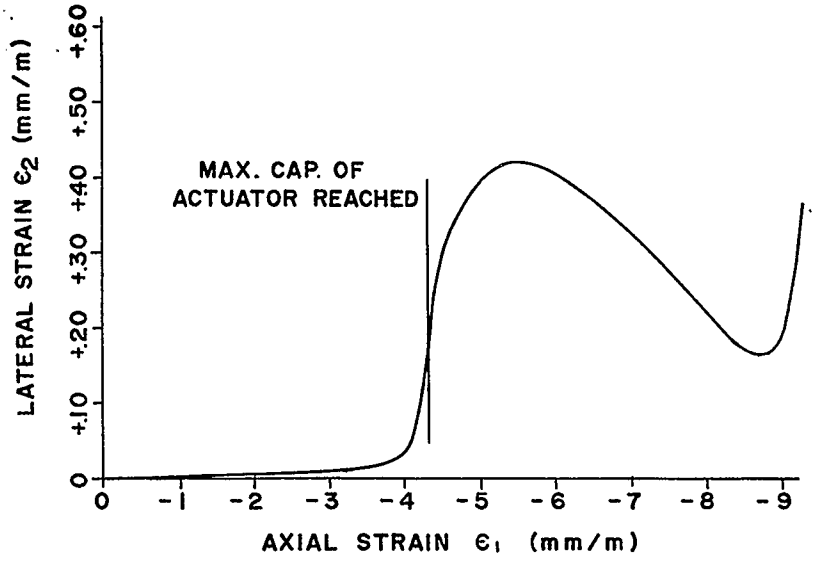

(a) Applied Strains

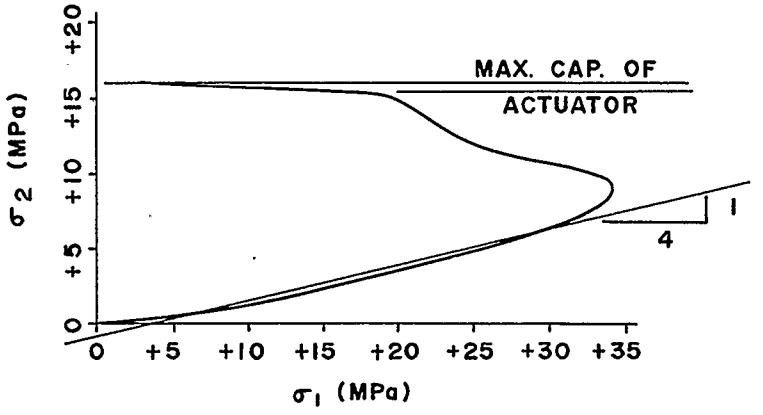

(b) Applied Stresses

FIGURE 4.14 RELATIONSHIPS BETWEEN APPLIED STRESSES AND STRAINS FOR BI-AXIAL TEST (NO. 39)

the maximum capacity of the actuator, as indicated in Figure 4.14b.

Comparison to other investigations is, obviously, not possible, except that some research has shown (Schickert, 1979, and Nelisson, 1972) that testing under constant bi-axial compression in which the principal stress ratio is maintained at 3:1 (σ_1:σ_2 in this case) should yield transverse strains which are approximately zero up to 85 percent of the peak stress. The stress ratio (Figure 4.14b) for the test is approximately 4:1.

The strain distribution, as measured by the strain gauges, is (statistically) uniform. The 90% confidence intervals of the mean gauge readings are plotted in Figure 4.15a (direction x_1 versus ε_1) and Figure 4.15b (direction x_2 versus ε_1). The relationship between the strain readings and overall strain, as measured by LVDT, is similar to that exhibited for uni-axial compression tests.

The failed specimen is shown in Figure 4.16. The specimen identification shown is wrong in that the strain rate in direction 2 was 0×10^{-6} per second and not $+2 \times 10^{-6}$ per second as indicated. Failure was initiated by the formation of a fracture surface at approximately 20° to the unloaded (i.e., top and bottom) surfaces of the specimen. This is in accordance with the failure mode identified by previous investigators (Kupfer et al., 1969).

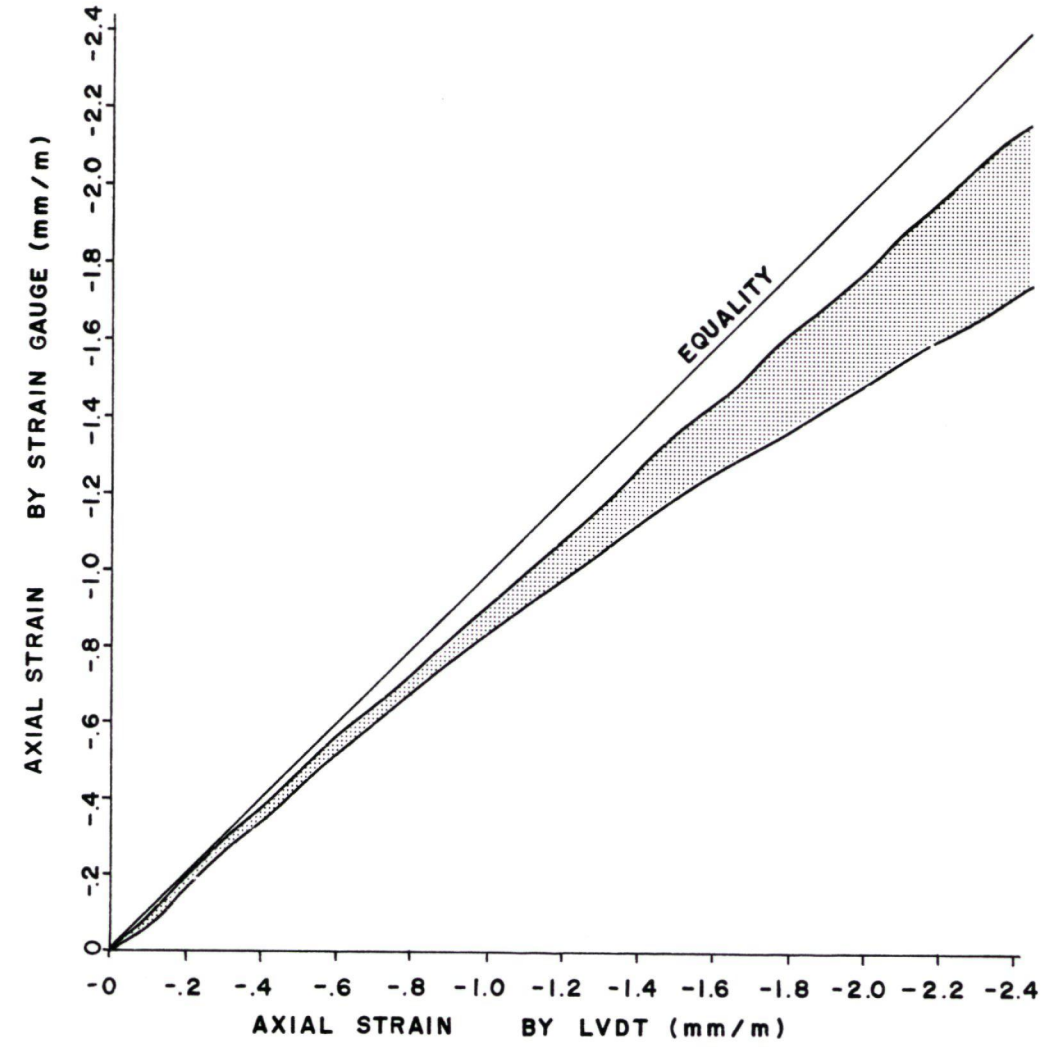

(a) Strain in Direction 1

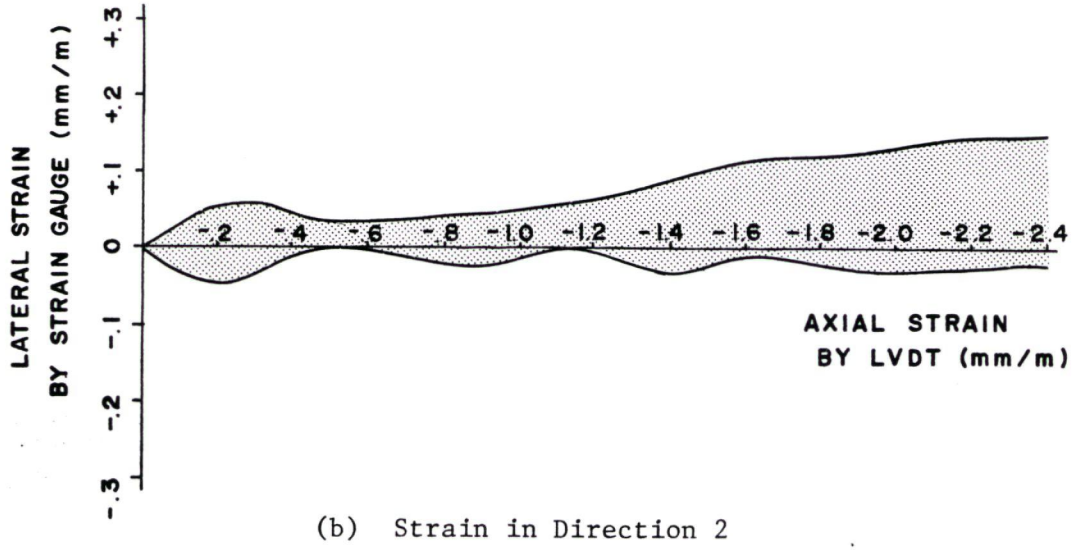

(b) Strain in Direction 2

FIGURE 4.15 90% CONFIDENCE LIMITS ON AVERAGE STRAIN GAUGE READINGS FOR BI-AXIAL TEST (NO. 39)

(a)

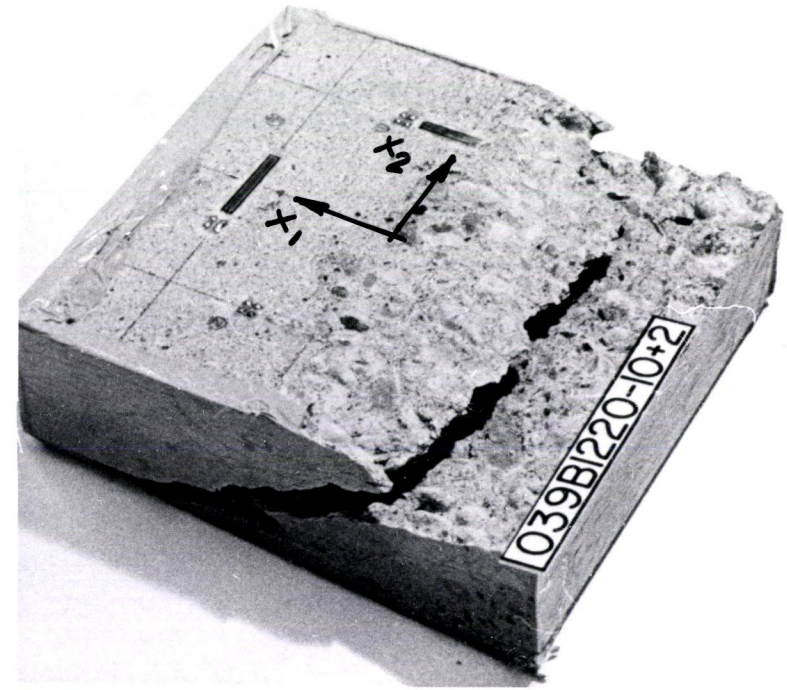

(b)

FIGURE 4.16 FRACTURE PATTERN FOR BI-AXIAL TEST (NO. 39)

CHAPTER 5

CONCLUSIONS AND RECOMMENDATIONS

5.1 Conclusions

The objective of this project was the development of a testing machine capable of testing plain concrete specimens under constant biaxial compression-tension and tension-tension rates of deformation. Based on the results of the (limited) experimental program, it may be concluded that:

(1) The testing machine is able to induce a reasonably uniform distribution of strain (stress) throughout the test specimens in both compression and tension. The use of a high modulus, high strength epoxy as an interface between the platens and the specimens was instrumental in achieving a uniform distribution and does not appear to adversely affect the results.

(2) The results of tests carried out on similar concretes subject to similar loading conditions are repeatable in that the response in both stress and strain is nearly identical.

Since experiments were not carried out for the regimes of biaxial compression-tension and tension-tension states of strain, it cannot be shown directly that the above conclusions are valid for all cases. In addition, specimen and testing machine response to very high or variable rates of deformation were not determined.

5.2 Recommendations

As a result of the numerous difficulties encountered during the course of this project, a number of technical refinements, changes and additions are suggested. These are:

(1) All electronic controls should be thoroughly cleaned or replaced so that complete control over actuator movements can be maintained at all times.

(2) Devices should be designed to hold the platens against the specimen, with a constant pressure, so that the epoxy interface can be formed and allowed to harden without the necessity of running the hydraulics for extended periods of time.

(3) A magnetic damping mechanism should be built for the device used to measure deformations through the depth of the specimen, since it is susceptible to low frequency vibrations such as those which accompany the start of piston movements in the actuator.

(4) The actuator for Frame 2 should be replaced with one of somewhat greater capacity. The servo valve presently being used should be replaced because, even after cleaning, it still exhibited erratic behaviour at times.

The following experiments are suggested for further verification of the testing machine:

(1) Determination of the strain distribution in specimens subject to bi-axial compression-tension and tension-tension rates of deformation.

(2) Determination of specimen and testing machine response to very high rates of deformation.

(3) System response to pre-programmed variable rates of deformation.

REFERENCES

Andenaes, E., Gerstle, K., and Ko, H.Y. (1977), "Response of Mortar and Concrete to Biaxial Compression", Journal of the Engineering Mechanics Division, A.S.C.E., 103(EM4), August, 1977.

Bellamy, C.J. (1961), "Strength of Concrete under Combined Stress", Journal of the American Concrete Institute, 58(4), October, 1961.

Bremer, F. and Steinsdorfer, F. (1976), "Bruchfegtiskeiten und Bruchverformung von Beton unter Mehraxialer Belastung bei Raumtemperatur", Deutscher Ausschuss Fur Stahlbeton, Heft 263, 1976.

Bresler, B. and Pister, K.S. (1958), "Strength of Concrete under Combined Stresses", Journal of the American Concrete Institute, 30(3), September, 1958.

Buyukozturk, O., Nilson, A.H., and Slate, F.O. (1971), "Stress-Strain Response and Fracture of a Concrete Model in Biaxial Loading", Journal of the American Concrete Institute, 68(8), August, 1971.

Carino, N.J. (1974), "Behavior of a Model of Plain Concrete Subject to Compression-Tension and Tension-Tension Biaxial Stresses", Cornell University, Department of Structural Engineering, Report 357, July, 1974.

Gerstle, K.H., Linse, D.H., Bertacchi, P., Kotsovos, M.D., Ko, H.Y., Newman, J.B., Rossi, P., Schickert, G., Taylor, M.A., Traina, L.A., and Zimmerman, R.M. (1976), "Strength of Concrete under Multiaxial Stress States", (Unpublished manuscript courtesy of K.H. Gerstle, Department of Civil Engineering, University of Colorado, Boulder, Colorado).

Goode, C.D. and Helmy, M.A. (1967), "The Strength of Concrete under Combined Shear and Direct Stress", Magazine of Concrete Research, 19(59), June, 1967.

Hannant, D.J. (1974), "Nomograms for the Failure of Plain Concrete Subjected to Short-Term Multiaxial Stresses", The Structural Engineer, 52(5), May, 1974.

Hobbs, D.W. (1970), "Strength and Deformation Properties of Plain Concrete Subject to Combined Stress", Cement and Concrete Association, Technical Report No. 42.451.

Iyengar, S.R., Chandrashekhara, K. and Krishnaswamy, K.T. (1965), "Strength of Concrete under Biaxial Compression", Journal of the American Concrete Institute, 62(2), February, 1965.

Kupfer, H.B. and Gerstle, K.H. (1973), "Behavior of Concrete under Biaxial Stresses", Journal of the Engineering Mechanics Division, A.S.C.E., 99(EM4), August, 1973.

Kupfer, H., Hilsdorf, H.K., and Rusch, H. (1969), "Behavior of Concrete under Biaxial Stresses", Journal of the American Concrete Institute, 66(8), August, 1969.

Lewis, D.J. and Carmichael, G.D.T. (1970), "Multiaxial Failure Diagram for Concrete", Civil Engineer and Public Works Review, 65(765), April, 1970.

Linse, D. (1978), "Losung versuchstechnischer Fragen bei der Ermittlung des Festigkeits- und Verformungsverhaltens von Beton unter dreiachsiger Belastung", Deutscher Ausschuss Fur Stahlbeton, Heft 292, 1978.

Liu, T.C., Nilson, A.H. and Slate, F.O. (1972 ACI), "Stress-Strain Response and Fracture of Concrete in Uniaxial and Biaxial Compression", Journal of the American Concrete Institute, 69(5), May, 1972.

Liu, T.C., Nilson, A.H. and Slate, F.O. (1972 ASCE), "Biaxial Stress-Strain Relations for Concrete", Journal of the Structural Division, A.S.C.E., 98(ST5), May, 1972.

McHenry, D. and Karni, J. (1958), "Strength of Concrete under Combined Tensile and Compressive Stress", Journal of the American Concrete Institute, 54(10), April, 1958.

Mills, L.L. and Zimmerman, R.M. (1970), "Compressive Strength of Plain Concrete under Multiaxial Loading Conditions", Journal of the American Concrete Institute, 67(10), October, 1970.

Nelisson, L.J.M. (1972), "Biaxial Testing of Normal Concrete", Heron, 18(1), 1972.

Newman, J.B. (1974), "Apparatus for Testing Concrete under Multiaxial States of Stress", Magazine of Concrete Research, 26(89), December, 1974.

Parrott, L.J. (1970), "Improved Apparatus for Biaxial Loading of Concrete Specimens", Journal of Strain Analysis, 5(3), July, 1970.

Robinson, G.S. (1967), "Behavior of Concrete in Biaxial Compression", Journal of the Structural Division, A.S.C.E., 93(ST1), February, 1967.

Rosenthal, I. and Glucklich, J. (1970), "Strength of Plain Concrete under Biaxial Stress", Journal of the American Concrete Institute, 67(11), November, 1970.

Schickert, G. and Winkler, H. (1977), "Versuchsergebnisse zur Festigkeit und Verformung von Beton bei mehraxialer Druckbeanspruchung", Deutscher Ausschuss Fur Stahlbeton, Heft 277, 1977.

Tasuji, M.E. (1976), "Behavior of Plain Concrete Subject to Biaxial Stress", Cornell University, Department of Structural Engineering, Report 360, March, 1976.

Wastiels, J. (1979), "Behavior of Concrete under Multiaxial Stresses - A Review", Cement and Concrete Research, 9(1), 1979.

GENERAL REFERENCES

Benjamin, J.R. and Cornell, C.A., "Probability, Statistics, and Decision for Civil Engineers", McGraw-Hill Book Company, 1970.

Binns, R.D. and Mygind, H.S. (1949), "The Use of Electrical Resistance Strain Gauges and the Effect of Aggregate Size on Gauge Length in Connexion with the Testing of Concrete", Magazine of Concrete Research, 1(1), January, 1949.

Canadian Institute of Steel Construction, "Handbook of Steel Construction", Universal Offset Limited, Second Edition, 1975.

Canadian Institute of Steel Construction, "Canadian Structural Steel Design", Universal Offset Limited, First Edition, 1973.

Coates, R.C., Coutie, M.G., and Kong, F.K., "Structural Analysis", John Wiley & Sons, 1972.

Cooke, R.W. and Seddon, A.E. (1956), "The Laboratory Use of Bonded Wire Electrical Resistance Strain Gauges on Concrete at the Building Research Station", Magazine of Concrete Research, 8(22), March, 1956.

Ghali, A. and Neville, A.M., "Structural Analysis - A Unified Classical and Matrix Approach", Intext Educational Publishers, 1972.

Luzadder, W., "Basic Graphics", Prentice-Hall Inc., 1968.

"Machinery's Handbook", Industrial Press Inc., Twentieth Edition, 1975.

Malvern, L.E., "Introduction to the Mechanics of a Continuous Medium", Prentice-Hall Inc., 1969.

Neubert, H.K.P., "Strain Gauges - Kinds & Uses", MacMillan & Company Ltd., 1967.

Neville, A.M., "Properties of Concrete", Pitman Publishing, 1973.

Oden, J.T., "Mechanics of Elastic Structures", McGraw-Hill Book Company, 1967.

Seely, F.B. and Smith, J.O., "Advanced Mechanics of Materials", John Wiley & Sons, 1957.

Timoshenko, S.P. and Gere, J.M., "Mechanics of Materials", Van Nostrand Reinhold Company, 1972.

Timoshenko, S.P. and Goodier, J.N., "Theory of Elasticity", McGraw-Hill Book Company, 1951.

Walpole, R.E. and Myers, R.H., "Probability and Statistics for Engineers and Scientists", The MacMillan Company, 1972.

APPENDIX A

SPECIMEN IDENTIFICATION

a) UNI-AXIAL TESTS

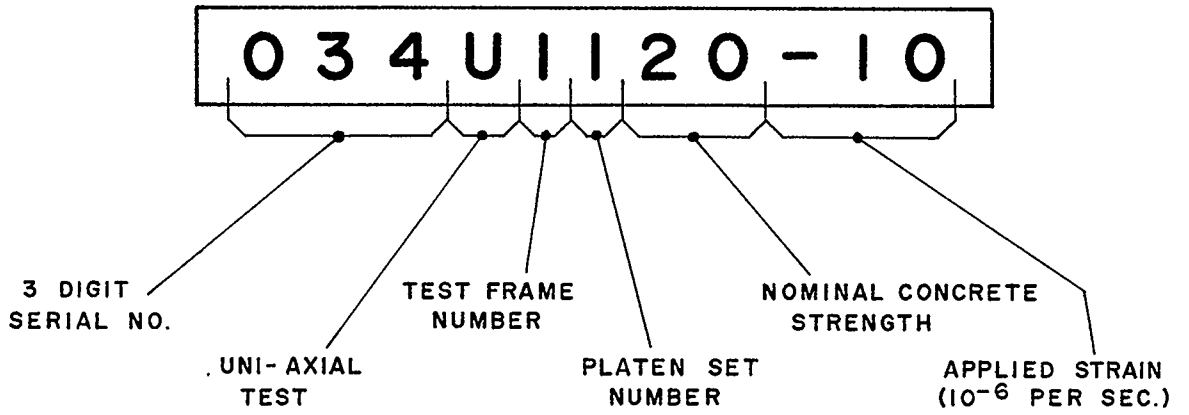

b) BI-AXIAL TESTS

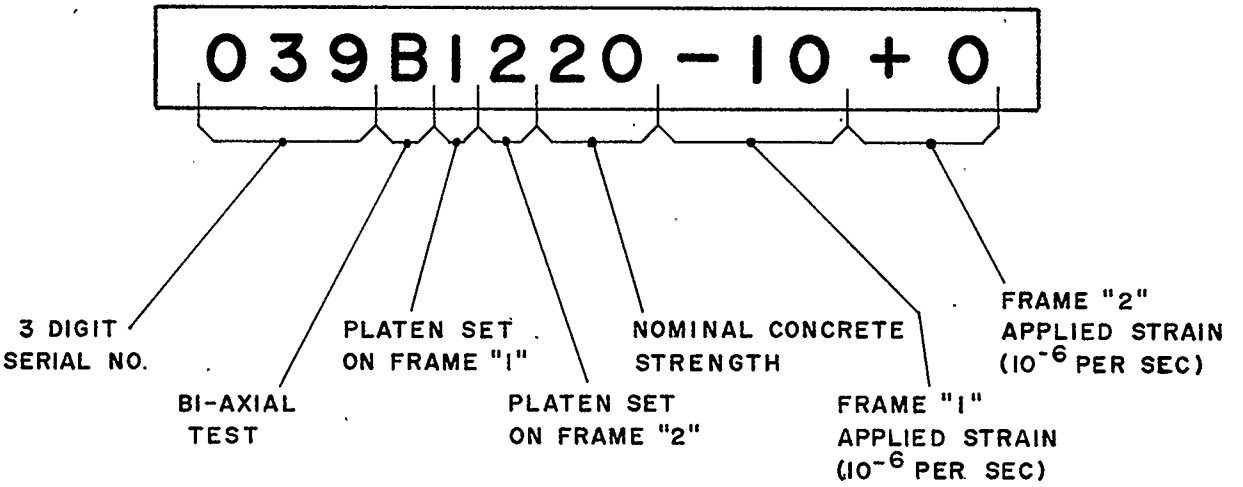

FIGURE A.1 EXAMPLES OF SPECIMEN IDENTIFICATION